JAN-AIR, INC

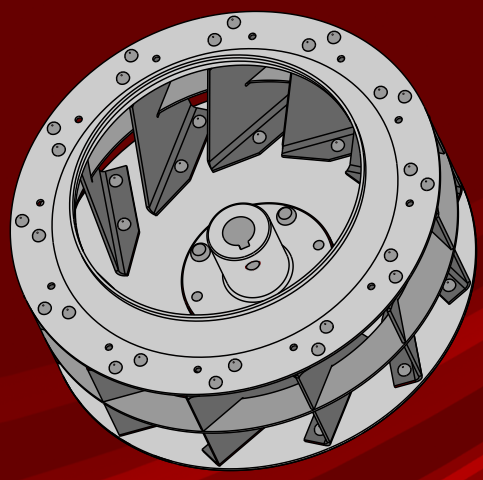

# B-SERIES

## BACKWARD-INLCLINED IMPELLERS

### - STEELS, STAINLESS STEELS, & ALUMINUM -

5801 Ami Drive
Richmond, IL 60071

815.678.4516
www.jan-air.com

# Materials, Finishes, and Features

## Standard Materials and Finishes:

**Steel - ASTM A1008 Type B Commercial Steel**
- Waterborne Paint (Gray): Impellers rated up to 180°F
- High-Temperature Paint: Impellers rated up to 600°F
- Powder Coat #258 (Black): Impellers rated up to 300°F
- Hubs made of Cast Iron and Dura-Bar G2

**5052 Aluminum - Marine Grade Aluminum**
- Impellers rated up to 200°F
- Anodizing finishes available by request
- Hubs made from 319 Cast Al or 6061 Al

**304L Stainless Steel - Economical stainless steel**
- Impellers rated up to 800°F
- Electropolishing available for a chrome-like finish
- Hubs made of 303L Stainless Steel

**316L Stainless Steel - (2% Molybdenum)**
- Impellers rated up to 1000°F
- Electropolishing available for a chrome-like finish
- Hubs made of 316L Stainless Steel

## Non-Standard Materials:

HSLA Steels - Cor-Ten® or Strenx™/Domex® - High-Strength & Excellent Abrasion Resistance (up to 600°F)

6061 Aluminum - High-Strength Marine Grade (Impellers rated up to 200°F)

Monel 400 - Ultimate corrosion resistant properties (63% Nickel, Impellers rated up to 900°F)

430L Stainless Steel - Economical & corrosion resistant (17% Chromium, Impellers rated up to 800°F)

## Non-Standard Finishes:

Powder Coat #378 (Black): Impellers rated up to 600°F / stationary parts up to 1000°F (only for steels).

Zinc plating & Hot-Dip Galvanization: parts up to 130°F (only for steels); availability varies by product.

## Impeller Applications:

| | |
|---|---|
| Commonly For | Product cooling & drying, combustion air, supply & exhaust, fume & dust collection, and more. |
| High-Efficiency | A good choice for low power consumption with non-overloading brake power curves. |
| Harsh Industrial | Impeller has a slight tolerance for dust and moisture in harsher industrial applications. |

## Impeller Standard Reinforcement Features:

| | |
|---|---|
| Peripheral Rod | For steel and stainless steel, a rod is added around the perimeter of the blades to prevent blade buckling at high speeds. The rod is welded to each blade and overlapped at it's seam. |
| Peripheral Rings | For aluminum impellers, a ring is added around the perimeter of the blades to prevent blade buckling at high speeds. The ring is welded to each blade on both sides; the ring is commonly .090" thick aluminum and matches the blade thickness. |

## Impeller Non-Standard Features:

| | |
|---|---|
| Flat Front Ring | The impeller can be modified to have a flat front ring with only slight losses in performance. |
| Welded Blades | Additional stitch welds can be added to each blade for an extra rigid construction. |
| Inner Blade Rod | An additional rod can be used on the inside blade edge in addition to an external peripheral rod. The internal rod stiffens the blade for the maximum possible resistance to blade buckling. |

## Impeller Construction Styles:

| | |
|---|---|
| Steels & Stainless | Riveted blades with additional spot welds; 16 ga spot welded reinforcement disk on outside. |
| Aluminum | 0.125" thick back disk; 0.09" thick blades and Ø3/16" solid rivets are available in larger sizes. |

# Backward-Inclined Impellers

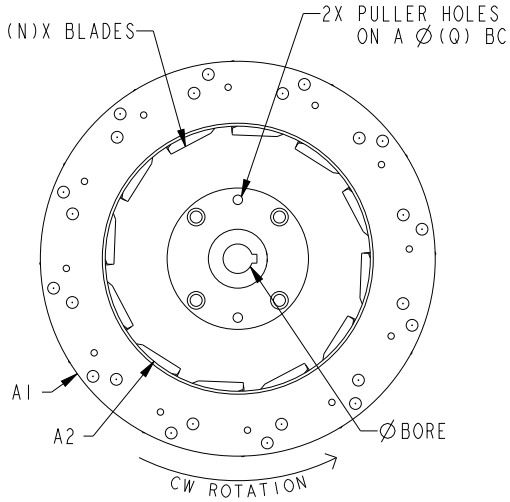



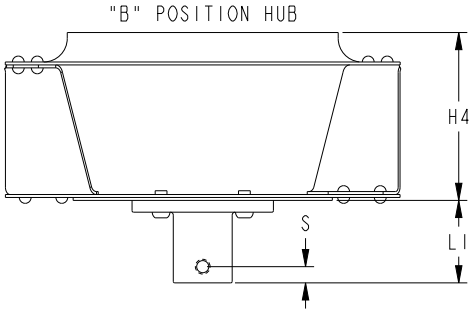


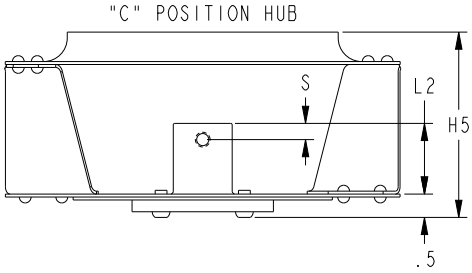


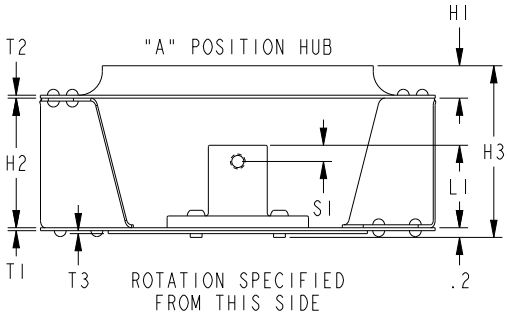



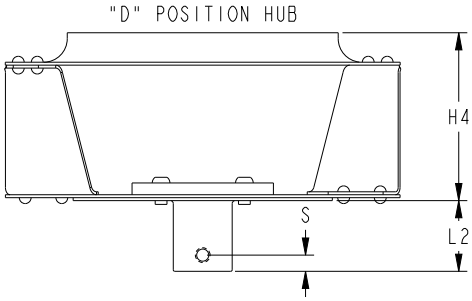


| STANDARD IMPELLER DIMENSIONS | | | | | | | | | DIMS BY POSITION | | | HUB |
|---|---|---|---|---|---|---|---|---|---|---|---|---|
| OD | ID | BD THK | FR THK | RD THK | BLDS | FR HT | BLD HT | PART NUMER | "A" | "B/D" | "C" | MTG GROUP |
| A1 | A2 | T1 | T2 | T3 | N | H1 | H2 | (ROOT ONLY) | H3 | H4 | H5 | |
| 7- 11/16 | 5-5/8 | 16 GA .125 AL | 16 GA .063 AL | 16 GA None AL | 14 | 13/16 | 2-1/4 | BZ123036 | 3.26 | 3.18 | 3.56 | #1 |
| | | | | | | | 2-3/4 | BZ123044 | 3.76 | 3.68 | 4.06 | |
| 8-3/8 | 5-21/32 | 16 GA .125 AL | 16 GA .063 AL | 16 GA None AL | 12 | 13/16 | 2-1/4 | BZ134036 | 3.26 | 3.18 | 3.56 | #1 #2 |
| | | | | | | | 2-3/4 | BZ134044 | 3.76 | 3.68 | 4.06 | |
| 9-3/16 | 6-5/16 | 16 GA .125 AL | 16 GA .063 AL | 16 GA None AL | 15 | 7/8 | 2-1/4 | BZ147036 | 3.33 | 3.25 | 3.63 | #2 #3 |
| | | | | | | | 2-3/4 | BZ147044 | 3.83 | 3.75 | 4.13 | |
| | | | | | | | 3-1/8 | BZ147050 | 4.20 | 4.12 | 4.50 | |
| 9-15/16 | 6-5/8 | 16 GA .125 AL | 16 GA .063 AL | 16 GA None AL | 12 | 1-1/16 | 2-1/4 | BZ159036 | 3.51 | 3.43 | 3.81 | #2 #3 |
| | | | | | | | 2-3/4 | BZ159044 | 4.01 | 3.93 | 4.31 | |
| | | | | | | | 3-1/8 | BZ159050 | 4.39 | 4.31 | 4.69 | |
| 10-5/8 | 7-5/16 | 16 GA .125 AL | 16 GA .063 AL | 16 GA None AL | 15 | 1-1/32 | 2-1/4 | BZ170036 | 3.48 | 3.40 | 3.78 | #2 #3 |
| | | | | | | | 2-3/4 | BZ170044 | 3.98 | 3.90 | 4.28 | |
| | | | | | | | 3-1/8 | BZ170050 | 4.36 | 4.28 | 4.66 | |
| | | | | | | | 3-3/4 | BZ170060 | 4.98 | 4.90 | 5.28 | |

| STANDARD IMPELLER DIMENSIONS | | | | | | | | | DIMS BY POSITION | | | HUB |
|---|---|---|---|---|---|---|---|---|---|---|---|---|
| OD | ID | BD THK | FR THK | RD THK | BLDS | FR HT | BLD HT | PART NUMER | "A" | "B/D" | "C" | MTG GROUP |
| A1 | A2 | T1 | T2 | T3 | N | H1 | H2 | (ROOT ONLY) | H3 | H4 | H5 | |
| 11-3/16 | 7-5/16 | 16 GA .125 AL | 16 GA .063 AL | 16 GA None AL | 15 | 1-1/32 | 2-1/4 | BZ179036 | 3.61 | 3.53 | 3.91 | #3 |
| | | | | | | | 2-3/4 | BZ179044 | 4.11 | 4.03 | 4.41 | |
| | | | | | | | 3-1/8 | BZ179050 | 4.48 | 4.40 | 4.78 | |
| | | | | | | | 3-3/4 | BZ179060 | 5.11 | 5.03 | 5.41 | |
| 12-3/16 | 8-9/16 | 16 GA .125 AL | 16 GA .063 AL | 16 GA None AL | 14 | 1-1/8 | 2-1/4 | BZ195036 | 3.61 | 3.53 | 3.91 | #3 |
| | | | | | | | 2-3/4 | BZ195044 | 4.11 | 4.03 | 4.41 | |
| | | | | | | | 3-1/8 | BZ195050 | 4.48 | 4.40 | 4.78 | |
| | | | | | | | 3-3/4 | BZ195060 | 5.11 | 5.03 | 5.41 | |
| 13-1/2 | 9-1/4 | 16 GA .125 AL | 16 GA .063 AL | 16 GA None AL | 15 | 1-3/16 | 2-1/4 | BZ216036 | 3.67 | 3.59 | 3.97 | #3 |
| | | | | | | | 2-3/4 | BZ216044 | 4.17 | 4.09 | 4.47 | |
| | | | | | | | 3-1/8 | BZ216050 | 4.54 | 4.46 | 4.84 | |
| | | | | | | | 3-3/4 | BZ216060 | 5.17 | 5.09 | 5.47 | |
| | | | | | | | 4-1/2 | BZ216072 | 5.92 | 5.84 | 6.22 | |
| 15 | 10-5/16 | 16 GA .125 AL | 16 GA .063 AL | 16 GA None AL | 16 | 1-5/16 | 2-1/4 | BZ240036 | 3.76 | 3.68 | 6.22 | #3 |
| | | | | | | | 2-3/4 | BZ240044 | 4.26 | 4.18 | 4.56 | |
| | | | | | | | 3-1/8 | BZ240050 | 4.64 | 4.56 | 4.94 | |
| | | | | | | | 3-3/4 | BZ240060 | 5.26 | 5.18 | 5.56 | |
| | | | | | | | 4-1/2 | BZ240072 | 6.01 | 5.93 | 6.31 | |
| | | | | | | | 5 | BZ240080 | 6.51 | 6.43 | 6.81 | |

- Consult factory for product weights.
- Mounting Groups (MTG. GROUP) and Reinforcement Rings ("R") are assigned by required speed rating. See speed rating tables on page 80 for more details. Once the mounting group is known, a hub can be selected (p. 7-9) based on required bore size.
- Front ring height ("FR HT") is ± 1/32"; Dimensions H3, H4, and H5 are ± 1/16"; 1/2", 1/4", and 1/8" dimensions are ± 1/32".
- Dimensions T1, T2, and T3: First line is for steels and stainless steels; second line is for aluminum; T3 does not exist for aluminum.

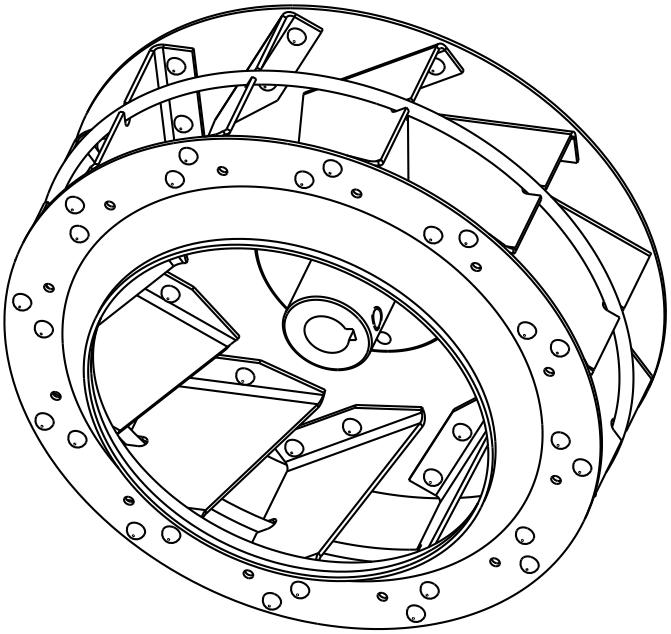

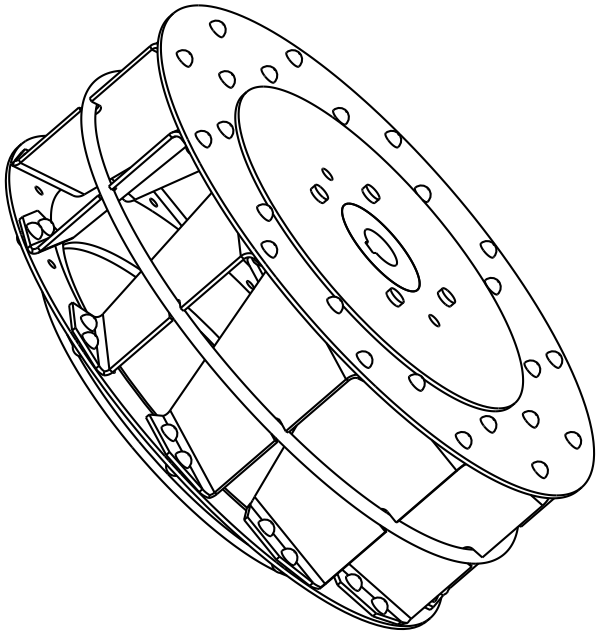

# STANDARD HUBS

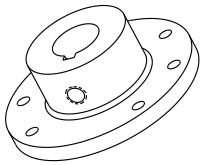

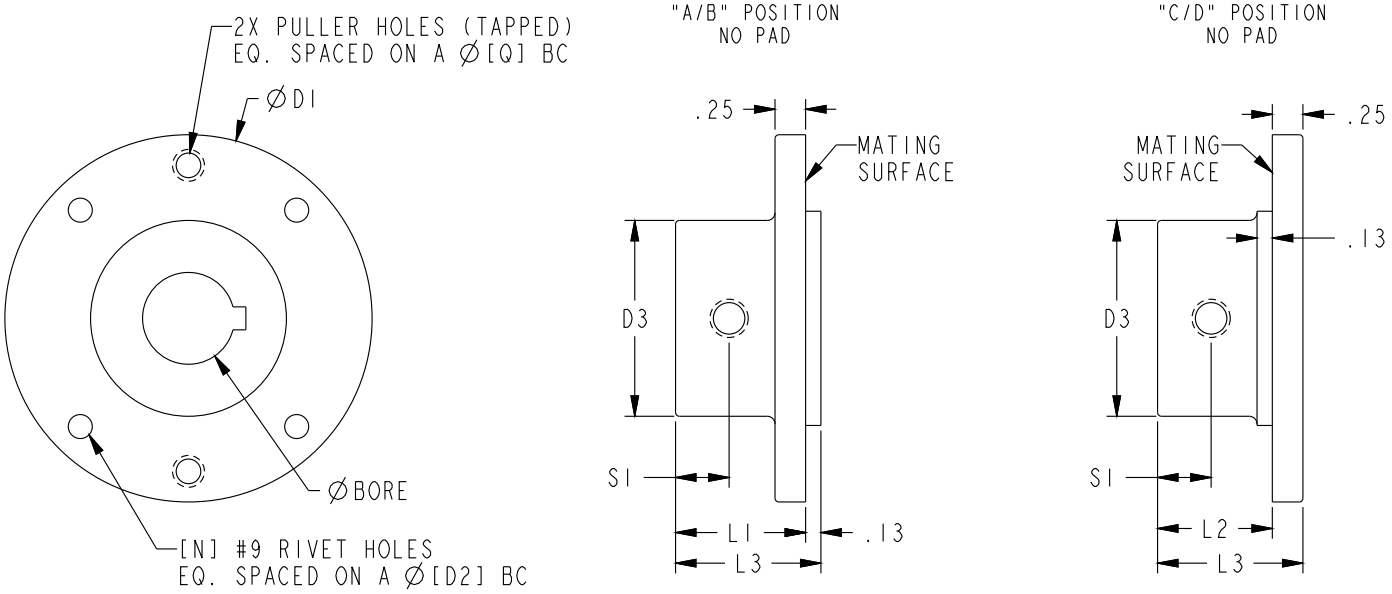


| MTG GROUP | HUB SHAPE | STANDARD | IMPERIAL BORES (in) | | METRIC BORES (mm) | | HUB LENGTHS | | | FLNG DIA | DBC | BRL DIA | PAD DIA | RIVET HOLES | PULLER HOLES | |
|---|---|---|---|---|---|---|---|---|---|---|---|---|---|---|---|---|
| | | | MIN | MAX | MIN | MAX | L1 | L2 | L3 | D1 | D2 | D3 | D4 | N | SIZE | Q |
| #1 | 1-093 | ✓ | 5/16 | 3/4 | 8 | 19 | 15/16 | 13/16 | 1-1/16 | 2-3/8 | 1-7/8 | 1-5/16 | - | 3 | NONE | - |
| | 1-143 | | 5/16 | 3/4 | 8 | 19 | 1-7/16 | 1-5/16 | 1-9/16 | 2-3/8 | 1-7/8 | 1-5/16 | - | 3 | NONE | - |
| #2 | 2-106 | ✓ | 3/8 | 15/16 | 10 | 22 | 1-1/16 | 15/16 | 1-3/16 | 3 | 2-1/2 | 1-23/32 | - | 4 | 1/4-20 | 2-1/2 |
| | 2-159 | | 1/2 | 15/16 | 13 | 23 | 1-19/32 | 1-15/32 | 1-23/32 | 3 | 2-1/2 | 1-23/32 | - | 4 | 1/4-20 | 2-1/2 |
| | 2-173 | ✓ | 1/2 | 15/16 | 13 | 23 | 1-47/64 | 1-39/64 | 1-55/64 | 3 | 2-1/2 | 1-23/32 | - | 4 | 1/4-20 | 2-1/2 |
| | 2-174 | | 1/2 | 15/16 | 13 | 23 | 1-3/4 | 1-5/8 | 1-7/8 | 3 | 2-1/2 | 1-23/32 | - | 4 | 1/4-20 | 2-1/2 |
| | 2-250 | | 1/2 | 15/16 | 13 | 23 | 2-1/2 | 2-3/8 | 2-5/8 | 3 | 2-1/2 | 1-23/32 | - | 4 | 1/4-20 | 2-1/2 |
| | 2-125 | | 5/16 | 3/4 | 8 | 19 | 1-1/4 | 1-1/8 | 1-3/8 | 3 | 2-1/2 | 1-5/16 | - | 4 | 1/4-20 | 2-1/2 |
| | 2-112 | ✓ | 1/2 | 1-3/16 | 13 | 30 | 1-1/8 | 1 | 1-1/4 | 3 | 2-1/2 | 2* | - | 4 | 1/4-20 | 2-1/2 |
| | 2-175 | | 1/2 | 1-3/16 | 13 | 30 | 1-3/4 | 1-5/8 | 1-7/8 | 3 | 2-1/2 | 2* | - | 4 | 1/4-20 | 2-1/2 |
| #3 | 3-175 | ✓ | 5/8 | 15/16 | 16 | 23 | 1-3/4 | 1-5/8 | 1-7/8 | 6 | 5-1/2 | 1-23/32 | - | 6 / 12 | 3/8-16 | 3-3/4 |
| | 3-237 | ✓ | 15/16 | 1-1/2 | 16 | 38 | 2-3/8 | 2-1/4 | 2-1/2 | 6 | 5-1/2 | 2-3/8* | - | 6 / 12 | 3/8-16 | 3-3/4 |
| | 3-250 | ✓ | 1-1/2 | 1-15/16 | 39 | 49 | 2-1/2 | 2-3/8 | 2-5/8 | 6 | 5-1/2 | 3 | - | 6 / 12 | 3/8-16 | 3-3/4 |

- Consult factory for product weights.
- Hubs normally selected by factory according to torque requirment and bore size - consult factory for details.
- Dimensions noted by (*) may very slightly by material selection (e.g. cast aluminum products have a drafted barrel).

# PADDED HUBS

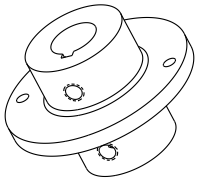

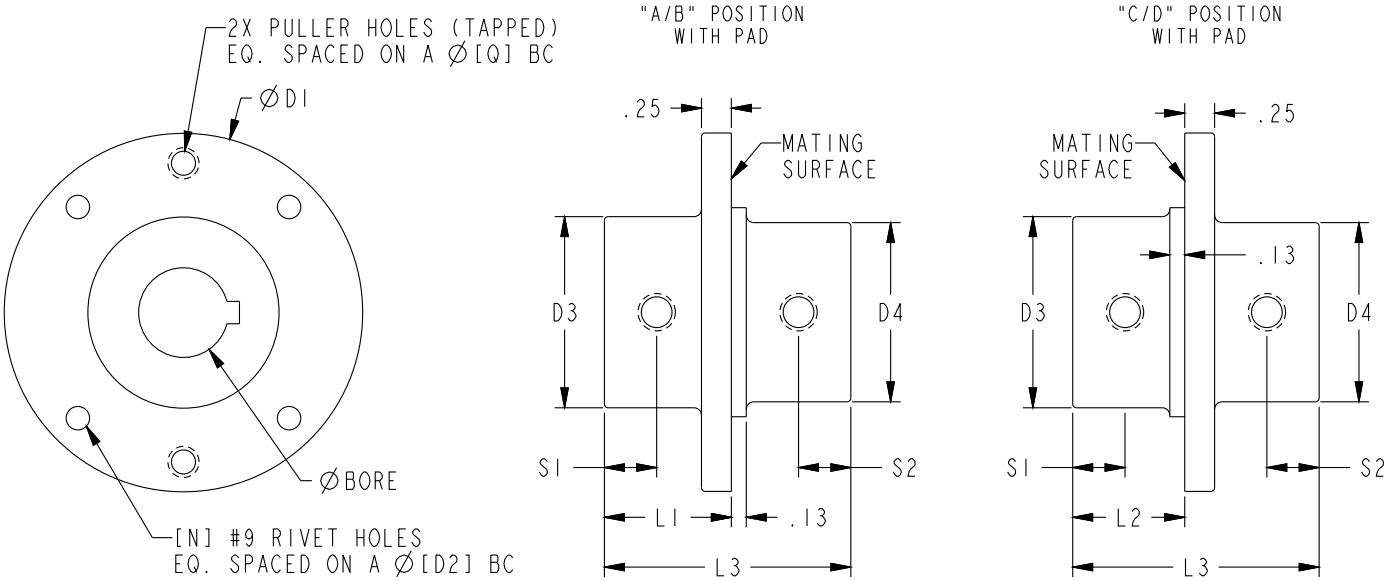


| MTG GROUP | HUB SHAPE | STANDARD | IMPERIAL BORES (in) | | METRIC BORES (mm) | | HUB LENGTHS | | | FLNG DIA | DBC | BRL DIA | PAD DIA | RIVET HOLES | PULLER HOLES | |
|---|---|---|---|---|---|---|---|---|---|---|---|---|---|---|---|---|
| | | | MIN | MAX | MIN | MAX | L1 | L2 | L3 | D1 | D2 | D3 | D4 | N | SIZE | Q |
| #2 | 2-084P | ✓ | ⅜ | ⅞ | 10 | 22 | 27/32 | 23/32 | 1-7/32 | 2-⅜ | 2-½ | 1-27/32 | 1-27/32 | 4 | ¼-20 | 2-½ |
| #3 | 3-162P | ✓ | ⅝ | 1-⅛ | 16 | 28 | 1-⅝ | 1-½ | 2-⅜ | 6 | 5-½ | 2 | 2 | 6 / 12 | ⅜-16 | 3-¾ |
| | 3-237P | ✓ | ⅝ | 1-⅜ | 16 | 38 | 2-⅜ | 2-¼ | 3-3/16 | 6 | 5-½ | 2-9/16* | 2-9/16* | 6 / 12 | ⅜-16 | 3-¾ |

- Consult factory for product weights.
- Hubs normally selected by factory according to torque requirment and bore size - consult factory for details.
- Dimensions noted by (*) may very slightly by material selection (e.g. cast aluminum products have a drafted barrel).

# Bushing Hubs

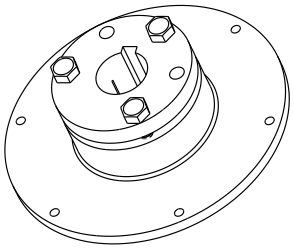

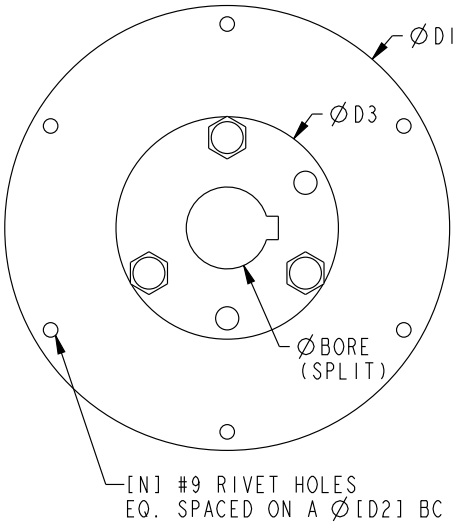


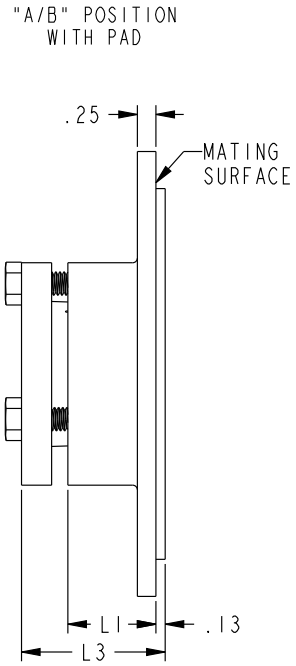


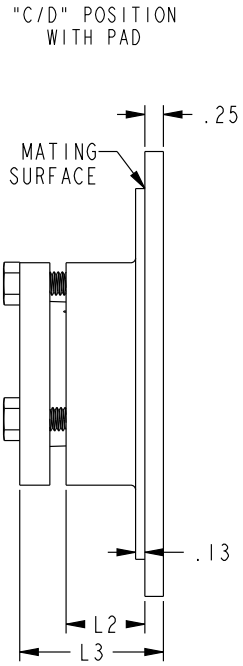


| MTG GROUP | HUB SHAPE | STANDARD | DST # | IMPERIAL BORES (in) | | METRIC BORES (mm) | | HUB LENGTHS | | | FLNG DIA | DBC | BRL DIA | RIVET HOLES | PULLER HOLES | |
|---|---|---|---|---|---|---|---|---|---|---|---|---|---|---|---|---|
| | | | | MIN | MAX | MIN | MAX | L1 | L2 | L3 | D1 | D2 | D3 | N | SIZE | Q |
| #2 | 2-050 | ✓ | G | ⅜ | 15⁄16 | 10 | 25 | ½ | - | 1 | 3 | 2-½ | 2 | 4 | - | - |
| #3 | 3-075 | ✓ | H | ⅜ | 1-⅜ | 10 | 38 | ¾ | ⅝ | 1-¼ | 6 | 5-½ | 2-½ | 6 / 12 | - | - |
| | 3-118 | ✓ | P1 | ½ | 1-¾ | 14 | 42 | 1-3⁄16 | 1-1⁄16 | 1-15⁄16 | 6 | 5-½ | 3 | 6 / 12 | - | - |

- Consult factory for product weights.
- Hubs normally selected by factory according to torque requirment and bore size - consult factory for details.
- Dimensions noted by (*) may very slightly by material selection (e.g. cast aluminum products have a drafted barrel).

# SET SCREW PLACEMENT AND TYPE

NORMAL PLACEMENT
[90° CW FROM KEYWAY]

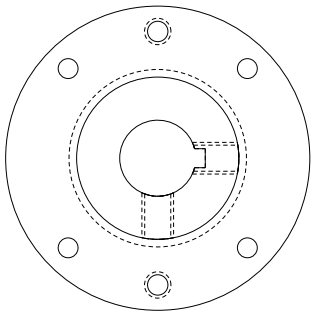

OPPOSITE PLACEMENT
[90° CCW FROM KEYWAY]

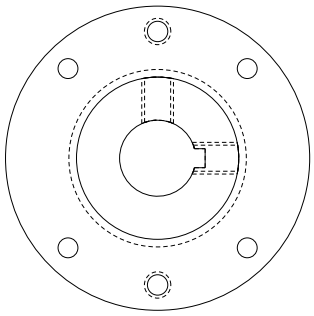

PLACEMENT ON PAD
[SET SCREWS ARE INLINE]

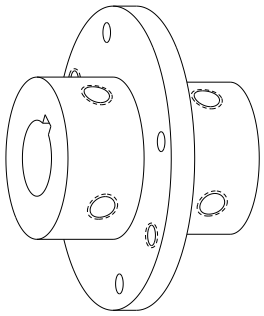

| SET SCREW DESIGNATIONS | | | | |
|---|---|---|---|---|
| SYMBOL | QTY | SIZE | "S" | REF |
| 0 | - | - | - | - |
| 1 | 1 | 5/16-18 | ST'D | - |
| 2 | 1 | 5/16-18 | SHORT | - |
| 3 | 1 | 5/16-18 | LONG | - |
| **A** | **2** | **5/16-18** | **ST'D** | **NORMAL** |
| **B** | **2** | **5/16-18** | **SHORT** | **NORMAL** |
| **C** | **2** | **5/16-18** | **LONG** | **NORMAL** |
| D | 2 | 5/16-18 | ST'D | OPPOSITE |
| E | 2 | 5/16-18 | SHORT | OPPOSITE |
| F | 2 | 5/16-18 | LONG | OPPOSITE |
| 4 | 1 | 1/4-20 | ST'D | - |
| 5 | 1 | 1/4-20 | SHORT | - |
| 6 | 1 | 1/4-20 | LONG | - |
| G | 2 | 1/4-20 | ST'D | NORMAL |
| H | 2 | 1/4-20 | SHORT | NORMAL |
| J | 2 | 1/4-20 | LONG | NORMAL |
| K | 2 | 1/4-20 | ST'D | OPPOSITE |
| M | 2 | 1/4-20 | SHORT | OPPOSITE |
| N | 2 | 1/4-20 | LONG | OPPOSITE |
| 7 | 1 | 3/8-16 | ST'D | - |
| 8 | 1 | 3/8-16 | SHORT | - |
| 9 | 1 | 3/8-16 | LONG | - |
| P | 2 | 3/8-16 | ST'D | NORMAL |
| Q | 2 | 3/8-16 | SHORT | NORMAL |
| R | 2 | 3/8-16 | LONG | NORMAL |
| S | 2 | 3/8-16 | ST'D | OPPOSITE |
| T | 2 | 3/8-16 | SHORT | OPPOSITE |
| U | 2 | 3/8-16 | LONG | OPPOSITE |

| NORMAL HUBS | | | | |
|---|---|---|---|---|
| HUB SHAPE | SET SCREW PLACEMENT | | | |
| | "S1" - ST'D | "S1" - SHORT | "S1" - LONG | "S2" - PAD |
| 1-093 | 0.34 | - | 0.44 | - |
| 1-143 | 0.63 | 0.34 | 0.93 | - |
| 1-125 | 0.43 | 0.34 | 0.62 | - |
| 2-106 | 0.38 | 0.34 | 0.56 | - |
| 2-159 | 0.88 | 0.38 | 1.00 | - |
| 2-173 | 0.88 | 0.38 | 1.12 | - |
| 2-174 | 0.56 | 0.38 | 1.12 | - |
| 2-250 | 0.50 | 0.38 | 1.88 | - |
| 2-112 | 0.43 | 0.38 | 0.62 | - |
| 2-175 | 0.56 | 0.38 | 1.12 | - |
| 3-175 | 0.63 | 0.38 | 1.12 | - |
| 3-237 | 1.13 | 0.38 | 1.75 | - |
| 3-250 | 1.13 | 0.38 | 1.88 | - |

| PADDED HUBS | | | | |
|---|---|---|---|---|
| HUB SHAPE | SET SCREW PLACEMENT | | | |
| | "S1" - ST'D | "S1" - SHORT | "S1" - LONG | "S2" - PAD |
| 2-084P | 0.38 | 0.34 | 0.50 | - |
| 3-162P | 0.50 | 0.38 | 0.88 | 0.38 |
| 3-237P | 1.13 | 0.38 | 1.75 | 0.38 |

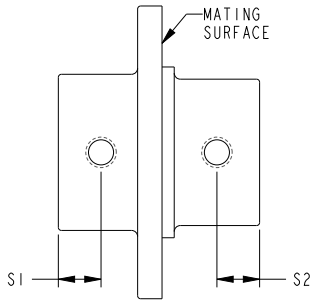

# Bores and Keyways

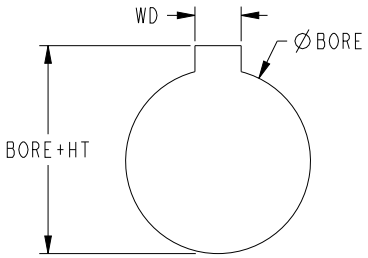


***Bore has tolerances of (+0.001”/-0.000”)***

***Keyways are per ANSI B17.1***

| IMPERIAL BORES & KEYWAYS | | |
|---|---|---|
| BORE | KEYWAY WD X HT | SYM [BBB] |
| 5/16” | None | 031 |
| 3/8” | None | 037 |
| 7/16” | None | 043 |
| 1/2” | None | 050 |
| 9/16” | 1/8” X 1/16” | 056 |
| 5/8” | 3/16” X 3/32” | 062 |
| 11/16” | 3/16” X 3/32” | 068 |
| 3/4” | 3/16” X 3/32” | 075 |
| 13/16” | 3/16” X 3/32” | 081 |
| 7/8” | 3/16” X 3/32” | 087 |
| 15/16” | 1/4” X 1/8” | 093 |
| 1” | 1/4” X 1/8” | 100 |
| 1-1/16” | 1/4” X 1/8” | 106 |
| 1-1/8" | 1/4” X 1/8” | 112 |
| 1-3/16" | 1/4” X 1/8” | 118 |
| 1-1/4" | 1/4” X 1/8” | 125 |
| 1-5/16" | 5/16” X 5/32” | 131 |
| 1-3/8" | 5/16” X 5/32” | 137 |
| 1-7/16" | 3/8” X 3/16” | 143 |
| 1-1/2" | 3/8” X 3/16” | 150 |
| 1-9/16" | 3/8” X 3/16” | 156 |
| 1-5/8" | 3/8” X 3/16” | 162 |
| 1-11/16" | 3/8” X 3/16” | 168 |
| 1-3/4" | 3/8” X 3/16” | 175 |
| 1-13/16" | 1/2” X 1/4” | 181 |
| 1-7/8" | 1/2” X 1/4” | 187 |
| 1-15/16" | 1/2” X 1/4” | 193 |
| 2" | 1/2” X 1/4” | 200 |

| METRIC BORES & KEYWAYS | | |
|---|---|---|
| BORE | KEYWAY WD X HT | SYM [BBB] |
| 8 mm | None | 08M |
| 10 mm | None | 10M |
| 11 mm | None | 11M |
| 12 mm | None | 12M |
| 13 mm | 5 mm X 2.3 mm | 13M |
| 14 mm | 5 mm X 2.3 mm | 14M |
| 15 mm | 5 mm X 2.3 mm | 15M |
| 16 mm | 5 mm X 2.3 mm | 16M |
| 17 mm | 5 mm X 2.3 mm | 17M |
| 18 mm | 6 mm X 2.8 mm | 18M |
| 19 mm | 6 mm X 2.8 mm | 19M |
| 20 mm | 6 mm X 2.8 mm | 20M |
| 22 mm | 6 mm X 2.8 mm | 22M |
| 24 mm | 8 mm X 3.3 mm | 24M |
| 25 mm | 8 mm X 3.3 mm | 25M |
| 27 mm | 8 mm X 3.3 mm | 27M |
| 28 mm | 8 mm X 3.3 mm | 28M |
| 30 mm | 8 mm X 3.3 mm | 30M |
| 32 mm | 10 mm X 3.3 mm | 32M |
| 35 mm | 10 mm X 3.3 mm | 35M |
| 36 mm | 10 mm X 3.3 mm | 36M |
| 38 mm | 10 mm X 3.3 mm | 38M |
| 39 mm | 12 mm X 3.3 mm | 39M |
| 40 mm | 12 mm X 3.3 mm | 40M |
| 42 mm | 12 mm X 3.3 mm | 42M |
| 45 mm | 14 mm X 3.8 mm | 45M |
| 48 mm | 14 mm X 3.8 mm | 48M |
| 50 mm | 14 mm X 3.8 mm | 50M |

- Bores less than 1/2” (or 12mm) are not keyed and have (1) 1/4-20 set screw - see set screw designations 4, 5, or 6.
- Bores equal to 1/2” (or 12mm) are not keyed and have (1) 5/16-18 set screw - see set screw designations 1, 2, or 3.
- Bores > 1/2” (or 12mm) have ANSI Standard keyways and have (2) 5/16-18 set screws - see set screw designations A, B, or C.
- Some bore sizes may not be available in standard straight bore hubs; special tooling or the use of a double split taper bushing may be required.

# *Standard* Backward-Inclined Inlet Cones

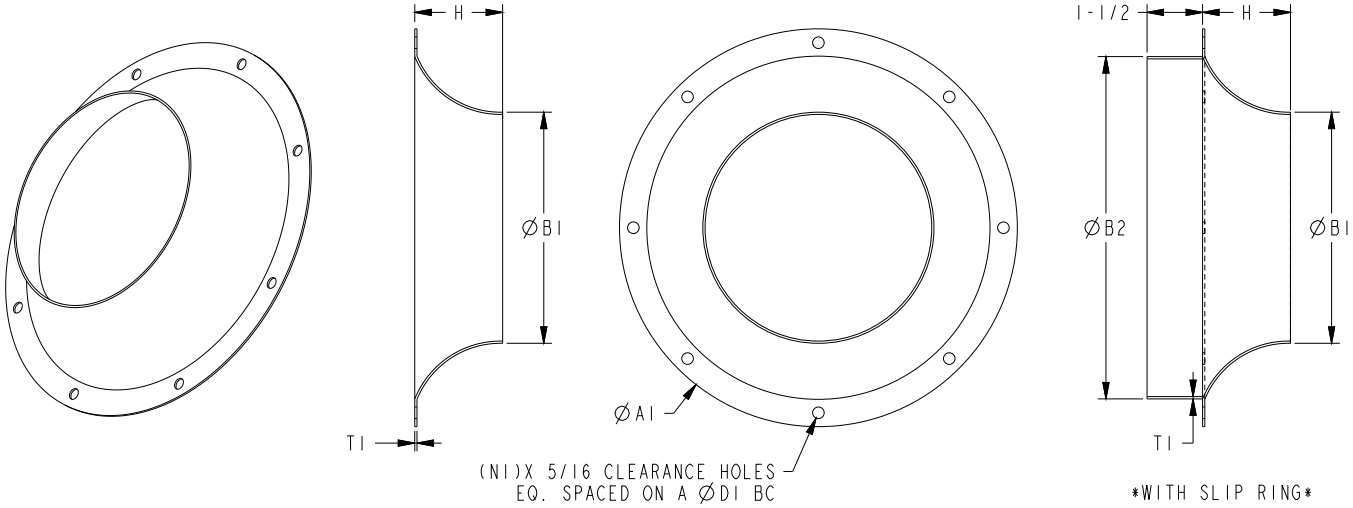


| STANDARD BACKWARD INCLINE INLET CONE DIMENSIONS | | | | | | | | |
|---|---|---|---|---|---|---|---|---|
| IMP DIA | ROOT PART NUMBER | OD | ID | HT | THK | MTG | DBC | OD |
| | | A1 | B1 | H | T1 | N1 | D1 | B2 |
| 7-11/16 | YNA123BY-04 | 9-1/8 | 5-3/8 | 2-3/8 | 16 GA / .063 AL | 4 | 8-5/8 | - |
| 8-3/8 | YNA134BY-04 | 10-1/16 | 5-5/16 | 2-7/16 | 16 GA / .063 AL | 4 | 9-5/16 | - |
| 9-3/16 | YNA147BY-08 | 10-3/4 | 6-1/8 | 2-3/8 | 16 GA / .063 AL | 8 | 10 | - |
| 9-15/16 | YNA159BY-08 | 12-1/4 | 6-1/2 | 2-1/2 | 16 GA / .063 AL | 8 | 11 | - |
| 10-5/8 | YNA170BY-08 | 12-1/2 | 7-1/8 | 2-1/2 | 16 GA / .063 AL | 8 | 11-3/8 | - |
| 12-3/16 | YNA195BY-08 | 14 | 8-1/2 | 3-13/16 | 16 GA / .063 AL | 8 | 13-1/8 | - |
| 13-1/2 | YNA216BY-08 | 15 | 9-1/16 | 4-1/8 | 16 GA / .063 AL | 8** | 14-3/4 | - |
| 15 | YNA240BY-08 | 15 | 10-1/8 | 4-1/2 | 16 GA / .063 AL | 8 | 16-1/2 | - |

| STANDARD BI INLET CONE DIMENSIONS WITH 1-½" SLIP RINGS | | | | | | | | |
|---|---|---|---|---|---|---|---|---|
| IMP DIA | ROOT PART NUMBER | OD | ID | HT | THK | MTG | DBC | OD |
| | | A1 | B1 | H | T1 | N1 | D1 | B2 |
| 7-11/16 | YNA123BY-04AF | 9-1/8 | 5-3/8 | 2-3/8 | 16 GA / .063 AL | 4 | 8-5/8 | 7-7/8 |
| 8-3/8 | YNA134BY-04AF | 10-1/16 | 5-5/16 | 2-7/16 | 16 GA / .063 AL | 4 | 9-5/16 | 7-7/8 |
| 9-3/16 | YNA147BY-08AG | 10-3/4 | 6-1/8 | 2-3/8 | 16 GA / .063 AL | 8 | 10 | 8-7/8 |
| 9-15/16 | YNA159BY-08AH | 12-1/4 | 6-1/2 | 2-1/2 | 16 GA / .063 AL | 8 | 11 | 9-7/8 |
| 10-5/8 | YNA170BY-08AH | 12-1/2 | 7-1/8 | 2-1/2 | 16 GA / .063 AL | 8 | 11-3/8 | 9-7/8 |
| 12-3/16 | YNA195BY-08AK | 14 | 8-1/2 | 3-13/16 | 16 GA / .063 AL | 8 | 13-1/8 | 11-7/8 |
| 13-1/2 | YNA216BY-08AM | 15 | 9-1/16 | 4-1/8 | 16 GA / .063 AL | 8** | 14-3/4 | 13-7/8 |
| 15 | YNA240BY-08AN | 15 | 10-1/8 | 4-1/2 | 16 GA / .063 AL | 8 | 16-1/2 | 15-7/8 |

** Notches (not holes) are used around the perimeter of the cone to accomodate the DBC listed.

# *Low Profile* Backward-Inclined Inlet Cones

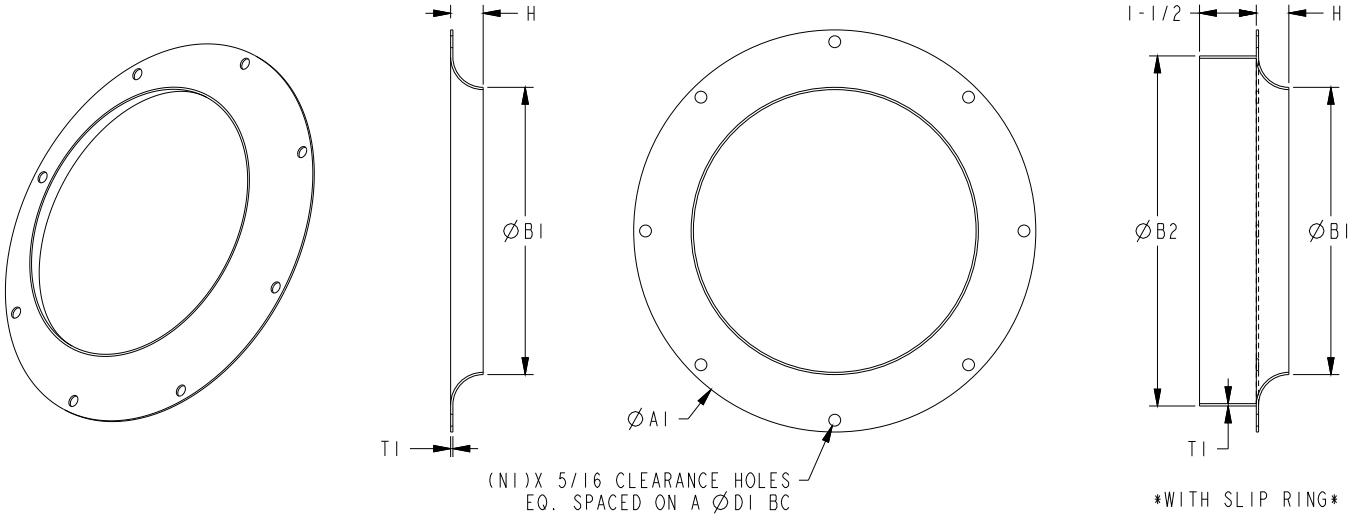


| LOW PROFILE BACKWARD INCLINE INLET CONE DIMENSIONS | | | | | | | | |
|---|---|---|---|---|---|---|---|---|
| IMP DIA | ROOT PART NUMBER | OD | ID | HT | THK | MTG | DBC | OD |
| | | A1 | B1 | H | T1 | N1 | D1 | B2 |
| 7-11/16 | YNA123BZ-04 | 9-3/16 | 5-3/4 | 13/16 | 16 GA / .063 AL | 4 | 8-5/8 | - |
| 8-3/8 | YNA134BZ-04 | 9-7/8 | 5-3/4 | 13/16 | 16 GA / .063 AL | 4 | 9-5/16 | - |
| 9-3/16 | YNA147BZ-08 | 10-9/16 | 6-11/16 | 7/8 | 16 GA / .063 AL | 8 | 10 | - |
| 9-15/16 | YNA159BZ-08 | 11-5/8 | 6-3/4 | 1-1/32 | 16 GA / .063 AL | 8 | 11 | - |
| 10-5/8 | YNA170BZ-08 | 12 | 7-3/8 | 7/8 | 16 GA / .063 AL | 8 | 11-3/8 | - |
| 11-3/16 | YNA179BZ-08 | 13-1/4 | 7-7/16 | 1-1/32 | 16 GA / .063 AL | 8 | 12-1/4 | - |
| 12-3/16 | YNA195BZ-08 | 13-3/4 | 8-11/16 | 1-5/32 | 16 GA / .063 AL | 8 | 13-1/8 | - |
| 13-1/2 | YNA216BZ-08 | 15-1/2 | 9-3/8 | 1-7/32 | 16 GA / .063 AL | 8 | 14-3/4 | - |
| 15 | YNA240BZ-08 | 17-1/8 | 10-7/16 | 1-5/16 | 16 GA / .063 AL | 8 | 16-1/2 | - |

| LOW PROFILE BI INLET CONE DIMENSIONS WITH 1-½" SLIP RINGS | | | | | | | | |
|---|---|---|---|---|---|---|---|---|
| IMP DIA | ROOT PART NUMBER | OD | ID | HT | THK | MTG | DBC | OD |
| | | A1 | B1 | H | T1 | N1 | D1 | B2 |
| 7-11/16 | YNZ123BZ-04AF | 9-3/16 | 5-3/4 | 13/16 | 16 GA / .063 AL | 4 | 8-5/8 | 7-7/8 |
| 8-3/8 | YNZ134BZ-04AF | 9-7/8 | 5-3/4 | 13/16 | 16 GA / .063 AL | 4 | 9-5/16 | 7-7/8 |
| 9-3/16 | YNZ147BZ-08AG | 10-9/16 | 6-11/16 | 7/8 | 16 GA / .063 AL | 8 | 10 | 8-7/8 |
| 9-15/16 | YNZ159BZ-08AH | 11-5/8 | 6-3/4 | 1-1/32 | 16 GA / .063 AL | 8 | 11 | 9-7/8 |
| 10-5/8 | YNZ170BZ-08AH | 12 | 7-3/8 | 7/8 | 16 GA / .063 AL | 8 | 11-3/8 | 9-7/8 |
| 11-3/16 | YNZ179BZ-08AK | 13-1/4 | 7-7/16 | 1-1/32 | 16 GA / .063 AL | 8 | 12-1/4 | 10-7/8 |
| 12-3/16 | YNZ195BZ-08AK | 13-3/4 | 8-11/16 | 1-5/32 | 16 GA / .063 AL | 8 | 13-1/8 | 11-7/8 |
| 13-1/2 | YNA216BZ-08AM | 15-1/2 | 9-3/8 | 1-7/32 | 16 GA / .063 AL | 8 | 14-3/4 | 13-7/8 |
| 15 | YNA240BZ-08AN | 17-1/8 | 10-7/16 | 1-5/16 | 16 GA / .063 AL | 8 | 16-1/2 | 15-7/8 |

# STANDARD HOUSINGS *(FOR STANDARD INLET CONES)*

***- FOR USE WITH STANDARD BI CONES -***
***(CONE SOLD SEPARATELY, SEE P. 10)***

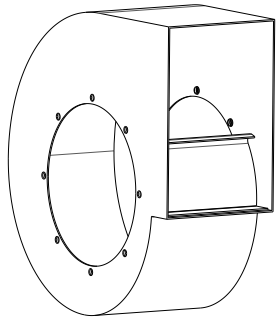

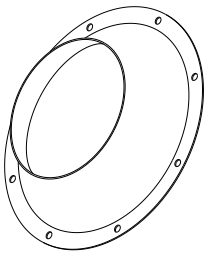

***STANDARD CONE***

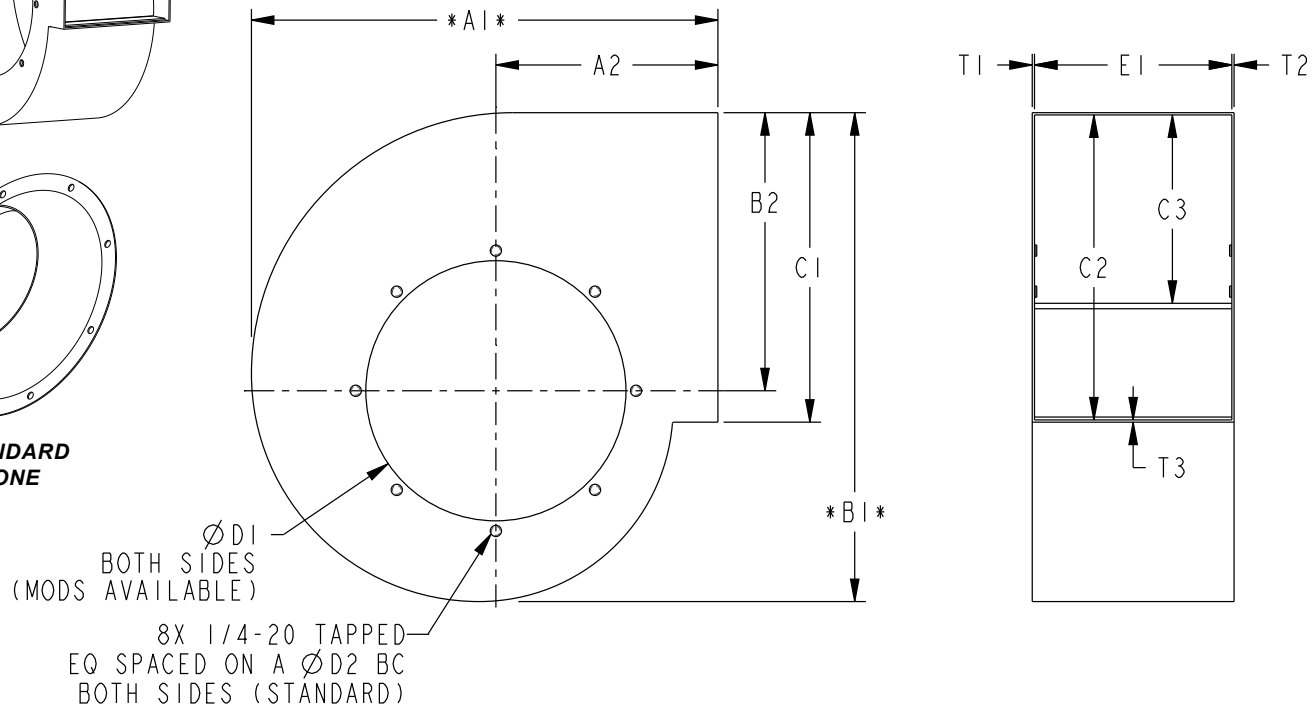


| STANDARD HOUSING DIMENSIONS (FOR USE WITH STANDARD INLET CONE) | | | | | | | | | | | | PART NUMBERS [PREFIXES ONLY] | |
|---|---|---|---|---|---|---|---|---|---|---|---|---|---|
| IMP DIA | WIDTH | | HEIGHT | | DISCHARGE | | | ID | DBC | BLD HT | BSP | | |
| | *A1* | A2 | *B1* | B2 | C1 | C2 | C3 | D1 | D2 | | E1 | ALL-WELDED | SLIP SEAM |
| 7-11/16 | 13-1/4 | 6-7/16 | 13-5/8 | 7-3/4 | 8-5/8 | 8-1/2 | 5-1/4 | 7-15/16 | 8-5/8 | 2-1/4 | 5-7/8 | HYN123094 | HZN123094 |
| | | | | | | | | | | 2-3/4 | 6-3/8 | HYN123102 | HZN123102 |
| 8-3/8 | 14-3/8 | 7 | 14-3/4 | 8-3/8 | 9-3/8 | 9-1/4 | 5-3/4 | 8-3/4 | 9-5/16 | 2-1/4 | 6 | HYN134096 | HZN134096 |
| | | | | | | | | | | 2-3/4 | 6-1/2 | HYN134104 | HZN134104 |
| 9-3/16 | 15-5/8 | 7-1/2 | 16-1/4 | 9-1/4 | 10-1/4 | 10-1/8 | 6-3/8 | 9-7/16 | 10 | 2-1/4 | 6 | HYN147096 | HZN147096 |
| | | | | | | | | | | 2-3/4 | 6-1/2 | HYN147104 | HZN147104 |
| | | | | | | | | | | 3-1/8 | 6-7/8 | HYN147110 | HZN147110 |
| 9-15/16 | 16-7/8 | 8 | 17-3/4 | 10-1/8 | 11-1/8 | 11 | 7-1/8 | 10-3/16 | 11 | 2-1/4 | 6-1/4 | HYN159100 | HZN159100 |
| | | | | | | | | | | 2-3/4 | 6-3/4 | HYN159108 | HZN159108 |
| | | | | | | | | | | 3-1/8 | 7-1/8 | HYN159114 | HZN159114 |
| 10-5/8 | 18-3/8 | 8-15/16 | 18-7/8 | 10-3/4 | 11-7/8 | 11-3/4 | 7-1/2 | 10-7/8 | 11-3/8 | 2-1/4 | 6-1/4 | HYN170100 | HZN170100 |
| | | | | | | | | | | 2-3/4 | 6-3/4 | HYN170108 | HZN170108 |
| | | | | | | | | | | 3-1/8 | 7-1/8 | HYN170114 | HZN170114 |
| | | | | | | | | | | 3-3/4 | 7-3/4 | HYN170124 | HZN170124 |
| 11-3/16 | 19-1/8 | 9-3/16 | 19-7/8 | 11-5/16 | 12-1/2 | 12-3/8 | 8 | 11-3/4 | 12-1/4 | Standard Cone Not Available - See “Low Profile” Options p. 14 - | | | |

# STANDARD HOUSINGS (FOR STANDARD INLET CONES, CONTINUED...)

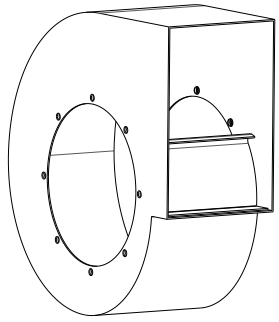

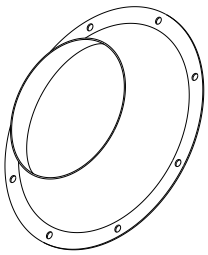

STANDARD CONE

***- FOR USE WITH STANDARD BI CONES -***
***(CONE SOLD SEPARATELY, SEE P. 10)***

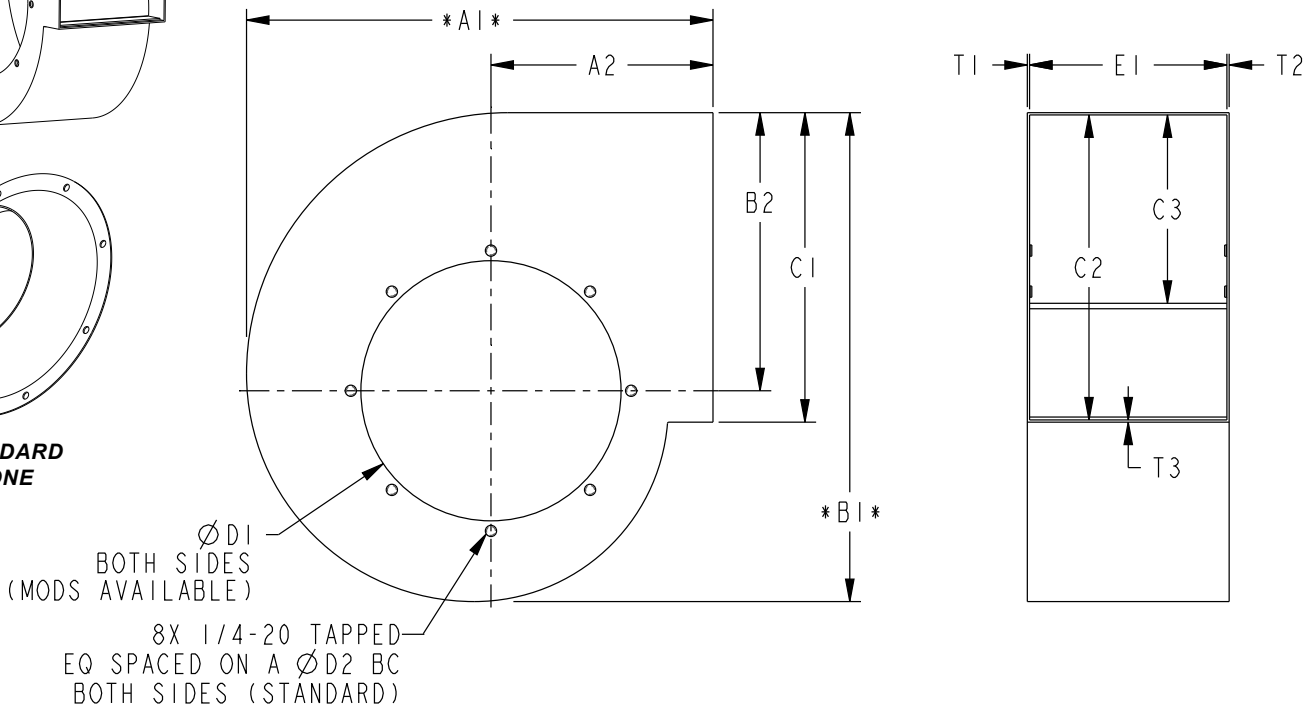


| STANDARD HOUSING DIMENSIONS (FOR USE WITH STANDARD INLET CONE) | | | | | | | | | | | | PART NUMBERS [PREFIXES ONLY] | |
|---|---|---|---|---|---|---|---|---|---|---|---|---|---|
| IMP DIA | WIDTH | | HEIGHT | | DISCHARGE | | | ID | DBC | BLD HT | BSP | | |
| | *A1* | A2 | *B1* | B2 | C1 | C2 | C3 | D1 | D2 | | E1 | ALL-WELDED | SLIP SEAM |
| 12-3/16 | 20-3/4 | 9-15/16 | 21-5/8 | 12-5/16 | 13-5/8 | 13-1/2 | 8-3/4 | 12-9/16 | 13-1/8 | 2-1/4 | 7-3/4 | HYN195124 | HZN195124 |
| | | | | | | | | | | 2-3/4 | 8-1/4 | HYN195132 | HZN195132 |
| | | | | | | | | | | 3-1/8 | 8-5/8 | HYN195138 | HZN195138 |
| | | | | | | | | | | 3-3/4 | 9-1/4 | HYN195148 | HZN195148 |
| 13-1/2 | 22-3/4 | 10-11/16 | 24-1/8 | 13-1/4 | 15 | 14-7/8 | 9-7/8 | 14-1/8 | 14-3/4 | 2-1/4 | 8-1/8 | HYN216130 | Not Available |
| | | | | | | | | | | 2-3/4 | 8-5/8 | HYN216138 | |
| | | | | | | | | | | 3-1/8 | 9 | HYN216144 | |
| | | | | | | | | | | 3-3/4 | 9-5/8 | HYN216154 | |
| | | | | | | | | | | 4-1/2 | 10-3/8 | HYN216166 | |
| 15 | 25-1/8 | 11-3/4 | 26-3/4 | 15-1/4 | 16-3/4 | 16-5/8 | 11 | 15-5/8 | 16-1/2 | 2-1/4 | 8-1/2 | HYN240136 | |
| | | | | | | | | | | 2-3/4 | 9 | HYN240144 | |
| | | | | | | | | | | 3-1/8 | 9-3/8 | HYN240150 | |
| | | | | | | | | | | 3-3/4 | 10 | HYN240160 | |
| | | | | | | | | | | 4-1/2 | 10-3/4 | HYN240172 | |
| | | | | | | | | | | 5 | 11-1/4 | HYN240180 | |

- All-Welded seam illustrated above and on previous page - alternate options available; see next page (p. 14) for details.
- ∗ Slip Seam Construction Only: Dimension is 1/16" greater than the value listed.
- Consult factory for product weights.

# HOUSINGS (*FOR LOW PROFILE INLET CONES)

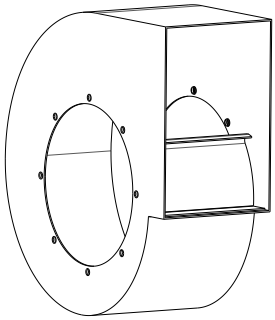

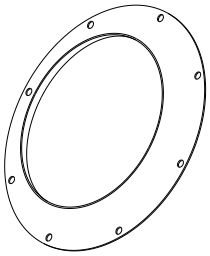

LOW PROFILE CONE

***- FOR USE WITH LOW PROFILE BI CONES -***
***(CONE SOLD SEPARATELY, SEE P. 11)***

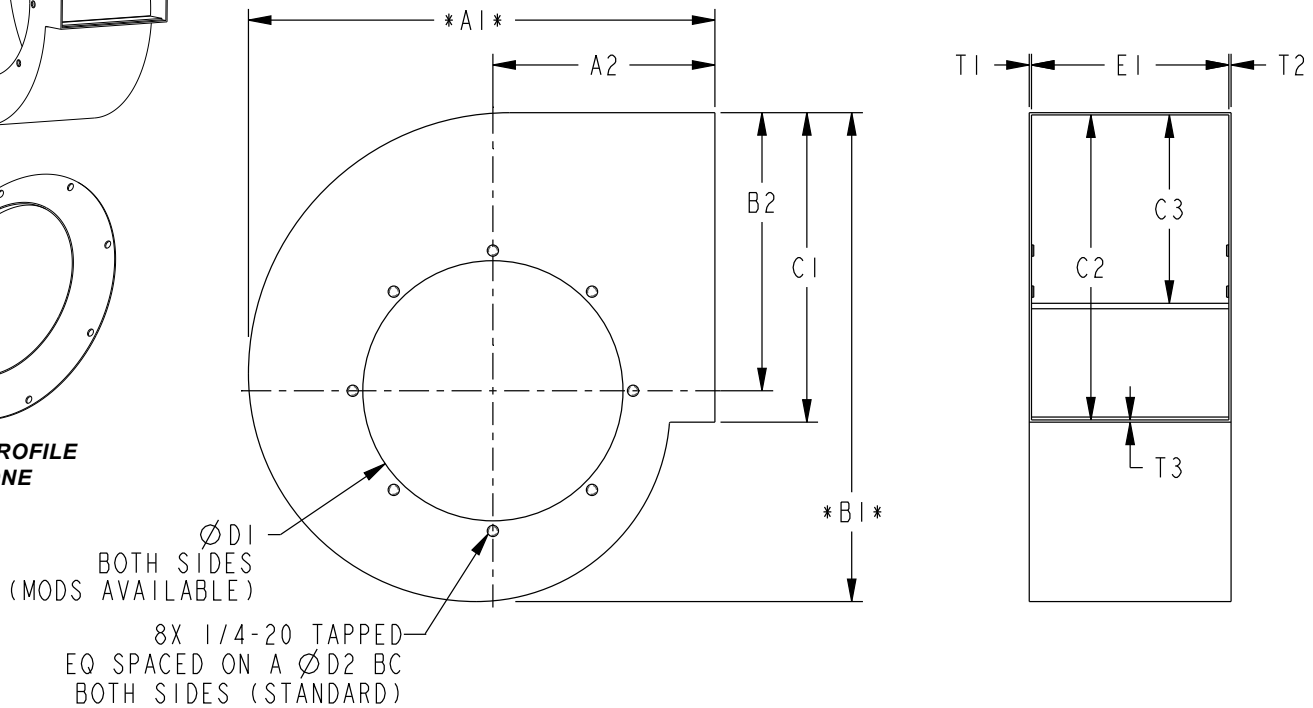


| STANDARD HOUSING DIMENSIONS (FOR USE WITH LOW PROFILE INLET CONE) | | | | | | | | | | | | PART NUMBERS [PREFIXES ONLY] | |
|---|---|---|---|---|---|---|---|---|---|---|---|---|---|
| IMP DIA | WIDTH | | HEIGHT | | DISCHARGE | | | ID | DBC | BLD HT | BSP | | |
| | *A1* | A2 | *B1* | B2 | C1 | C2 | C3 | D1 | D2 | | E1 | ALL-WELDED | SLIP SEAM |
| 7-11/16 | 13-1/4 | 6-7/16 | 13-5/8 | 7-3/4 | 8-5/8 | 8-1/2 | 5-1/4 | 7-15/16 | 8-5/8 | 2-1/4 | 4-3/8 | HYN123070 | HZN123070 |
| | | | | | | | | | | 2-3/4 | 4-7/8 | HYN123078 | HZN123078 |
| 8-3/8 | 14-3/8 | 7 | 14-3/4 | 8-3/8 | 9-3/8 | 9-1/4 | 5-3/4 | 8-3/4 | 9-5/16 | 2-1/4 | 4-3/8 | HYN134070 | HZN134070 |
| | | | | | | | | | | 2-3/4 | 4-7/8 | HYN134078 | HZN134078 |
| 9-3/16 | 15-5/8 | 7-1/2 | 16-1/4 | 9-1/4 | 10-1/4 | 10-1/8 | 6-3/8 | 9-7/16 | 10 | 2-1/4 | 4-1/2 | HYN147072 | HZN147072 |
| | | | | | | | | | | 2-3/4 | 5 | HYN147080 | HZN147080 |
| | | | | | | | | | | 3-1/8 | 5-3/8 | HYN147086 | HZN147086 |
| 9-15/16 | 16-7/8 | 8 | 17-3/4 | 10-1/8 | 11-1/8 | 11 | 7-1/8 | 10-3/16 | 11 | 2-1/4 | 4-7/8 | HYN159078 | HZN159078 |
| | | | | | | | | | | 2-3/4 | 5-3/8 | HYN159086 | HZN159086 |
| | | | | | | | | | | 3-1/8 | 5-3/4 | HYN159092 | HZN159092 |
| 10-5/8 | 18-3/8 | 8-15/16 | 18-7/8 | 10-3/4 | 11-7/8 | 11-3/4 | 7-1/2 | 10-7/8 | 11-3/8 | 2-1/4 | 4-5/8 | HYN170076 | HZN170076 |
| | | | | | | | | | | 2-3/4 | 5-1/8 | HYN170084 | HZN170084 |
| | | | | | | | | | | 3-1/8 | 5-1/2 | HYN170090 | HZN170090 |
| | | | | | | | | | | 3-3/4 | 6-1/8 | HYN170100 | HZN170100 |
| 11-3/16 | 19-1/8 | 9-3/16 | 19-7/8 | 11-5/16 | 12-1/2 | 12-3/8 | 8 | 11-3/4 | 12-1/4 | 2-1/4 | 4-7/8 | HYN179078 | HZN179078 |
| | | | | | | | | | | 2-3/4 | 5-3/8 | HYN179086 | HZN179086 |
| | | | | | | | | | | 3-1/8 | 5-3/4 | HYN179092 | HZN179092 |
| | | | | | | | | | | 3-3/4 | 6-3/8 | HYN179102 | HZN179102 |

# HOUSINGS (*FOR LOW PROFILE INLET CONES, CONTINUED...)

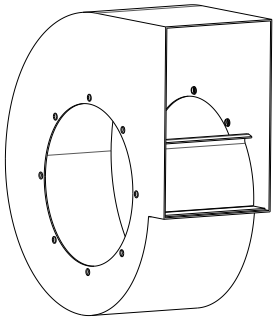

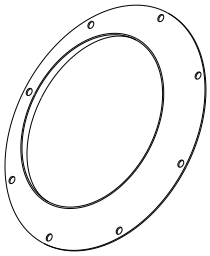

LOW PROFILE CONE

**- FOR USE WITH LOW PROFILE BI CONES -**
**(CONE SOLD SEPARATELY, SEE P. 11)**

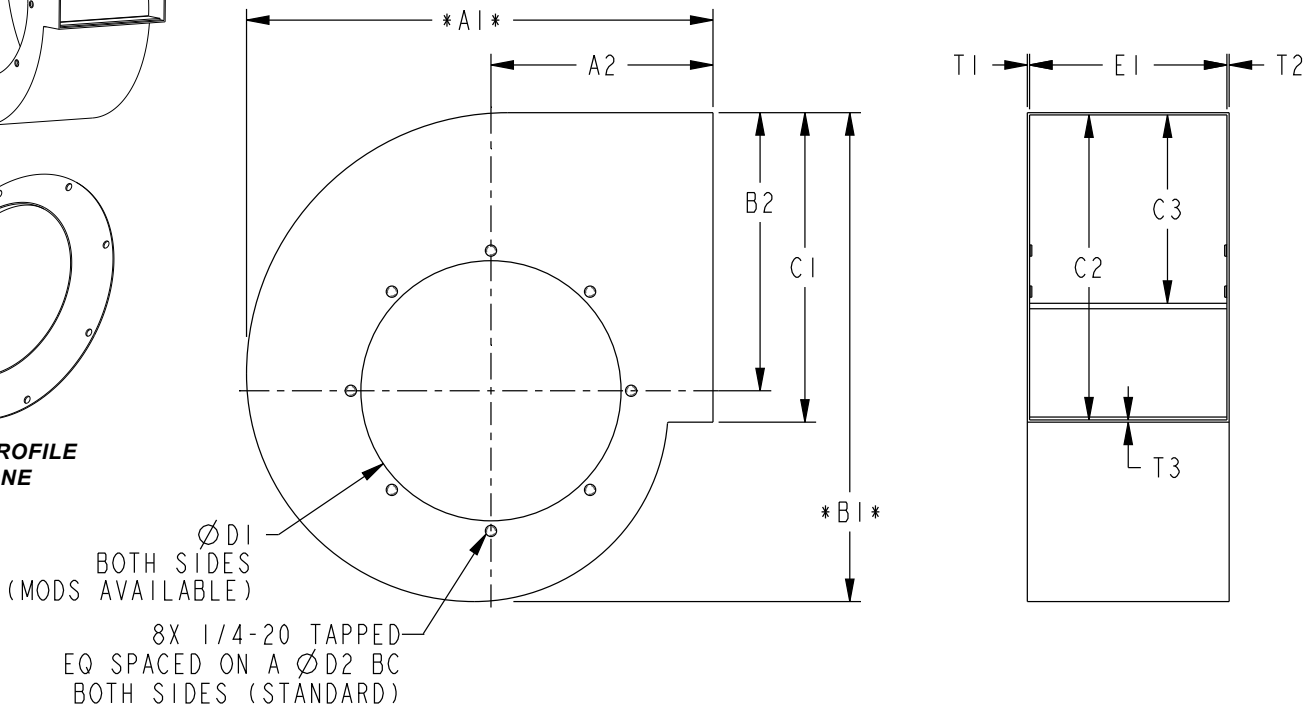


| STANDARD HOUSING DIMENSIONS (FOR USE WITH LOW PROFILE INLET CONE) | | | | | | | | | | | | PART NUMBERS [PREFIXES ONLY] | |
|---|---|---|---|---|---|---|---|---|---|---|---|---|---|
| IMP DIA | WIDTH | | HEIGHT | | DISCHARGE | | | ID | DBC | BLD HT | BSP | | |
| | *A1* | A2 | *B1* | B2 | C1 | C2 | C3 | D1 | D2 | | E1 | ALL-WELDED | SLIP SEAM |
| 12-3/16 | 20-3/4 | 9-15/16 | 21-5/8 | 12-5/16 | 13-5/8 | 13-1/2 | 8-3/4 | 12-9/16 | 13-1/8 | 2-1/4 | 5 | HYN195080 | HZN195080 |
| | | | | | | | | | | 2-3/4 | 5-1/2 | HYN195088 | HZN195088 |
| | | | | | | | | | | 3-1/8 | 5-7/8 | HYN195094 | HZN195094 |
| | | | | | | | | | | 3-3/4 | 6-1/2 | HYN195104 | HZN195104 |
| 13-1/2 | 22-3/4 | 10-11/16 | 24-1/8 | 13-1/4 | 15 | 14-7/8 | 9-7/8 | 14-1/8 | 14-3/4 | 2-1/4 | 5-1/8 | HYN216082 | Not Available |
| | | | | | | | | | | 2-3/4 | 5-5/8 | HYN216090 | |
| | | | | | | | | | | 3-1/8 | 6 | HYN216096 | |
| | | | | | | | | | | 3-3/4 | 6-5/8 | HYN216106 | |
| | | | | | | | | | | 4-1/2 | 7-3/8 | HYN216118 | |
| 15 | 25-1/8 | 11-3/4 | 26-3/4 | 15-1/4 | 16-3/4 | 16-5/8 | 11 | 15-5/8 | 16-1/2 | 2-1/4 | 5-3/8 | HYN240086 | |
| | | | | | | | | | | 2-3/4 | 5-7/8 | HYN240094 | |
| | | | | | | | | | | 3-1/8 | 6-1/4 | HYN240100 | |
| | | | | | | | | | | 3-3/4 | 6-7/8 | HYN240110 | |
| | | | | | | | | | | 4-1/2 | 7-5/8 | HYN240122 | |
| | | | | | | | | | | 5 | 8-1/8 | HYN240130 | |

- All-Welded seam illustrated above and on previous page - alternate options available; see next page (p. 14) for details.
- ∗ Slip Seam Construction Only: Dimension is 1/16" greater than the value listed.
- Consult factory for product weights.

# Housings: Construction Modifications

| [T] = CONSTRUCTION AND MATERIAL THICKNESS MODIFICATIONS (SEE FIGURE A) | | | | | |
|---|---|---|---|---|---|
| MODIFCATION DESCRIPTION | THICKNESSES (SIDE PLATES & WRAP) | | | STYLE | SYMBOL |
| | T1 | T2 | T3 | | |
| ALL-WELDED 16 GA CONSTRUCTION | 16 GA / .063 AL | 16 GA / .063 AL | 16 GA / .063 AL | AW | 6 |
| ALL-WELDED 14 GA CONSTRUCTION | 14 GA / .090 AL | 14 GA / .090 AL | 14 GA / .090 AL | AW | 4 |
| ALL-WELDED 12 GA CONSTRUCTION | 12 GA / .125 AL | 12 GA / .125 AL | 12 GA / .125 AL | AW | 2 |
| ALL-WELDED, 14 GA SIDE PLATES | 14 GA / .090 AL | 14 GA / .090 AL | 16 GA / .063 AL | AW | A |
| ALL-WELDED, 12 GA SIDES, 14 GA WRAP | 12 GA / .125 AL | 12 GA / .125 AL | 14 GA / .090 AL | AW | B |
| ALL-WELDED, 14 GA “CW” SIDE PLATE | 14 GA / .090 AL | 16 GA / .063 AL | 16 GA / .063 AL | AW | E |
| ALL-WELDED, 14 GA “CCW” SIDE PLATE | 16 GA / .063 AL | 14 GA / .090 AL | 16 GA / .063 AL | AW | F |
| ALL-WELDED, 12 GA “CW” SIDE PLATE | 12 GA / .125 AL | 16 GA / .063 AL | 16 GA / .063 AL | AW | G |
| ALL-WELDED, 12 GA “CCW” SIDE PLATE | 16 GA / .063 AL | 12 GA / .125 AL | 16 GA / .063 AL | AW | H |
| ALL-WELDED 14 GA, 12 GA “CW” SIDE PLATE | 12 GA / .125 AL | 14 GA / .090 AL | 14 GA / .090 AL | AW | M |
| ALL-WELDED 14 GA, 12 GA “CCW” SIDE PLATE | 14 GA / .090 AL | 12 GA / .125 AL | 14 GA / .090 AL | AW | N |
| | | | | | |
| SLIP-SEAM, STANDARD (STEEL & STAINLESS ONLY) | 16 GA | 16 GA | 20 GA | SLIP | 3 |
| SLIP-SEAM, THICK WRAP (STEEL & STAINLESS ONLY) | 16 GA | 16 GA | 18 GA | SLIP | 5 |
| SLIP-SEAM, EXTRA THICK (STEEL & STAINLESS ONLY) | 14 GA | 14 GA | 18 GA | SLIP | 7 |
| SLIP-SEAM, THICK PLATES (STEEL & STAINLESS ONLY) | 14 GA | 14 GA | 20 GA | SLIP | 9 |

FIGURE A: ALL-WELDED VS. SLIP SEAM CONSTRUCTION

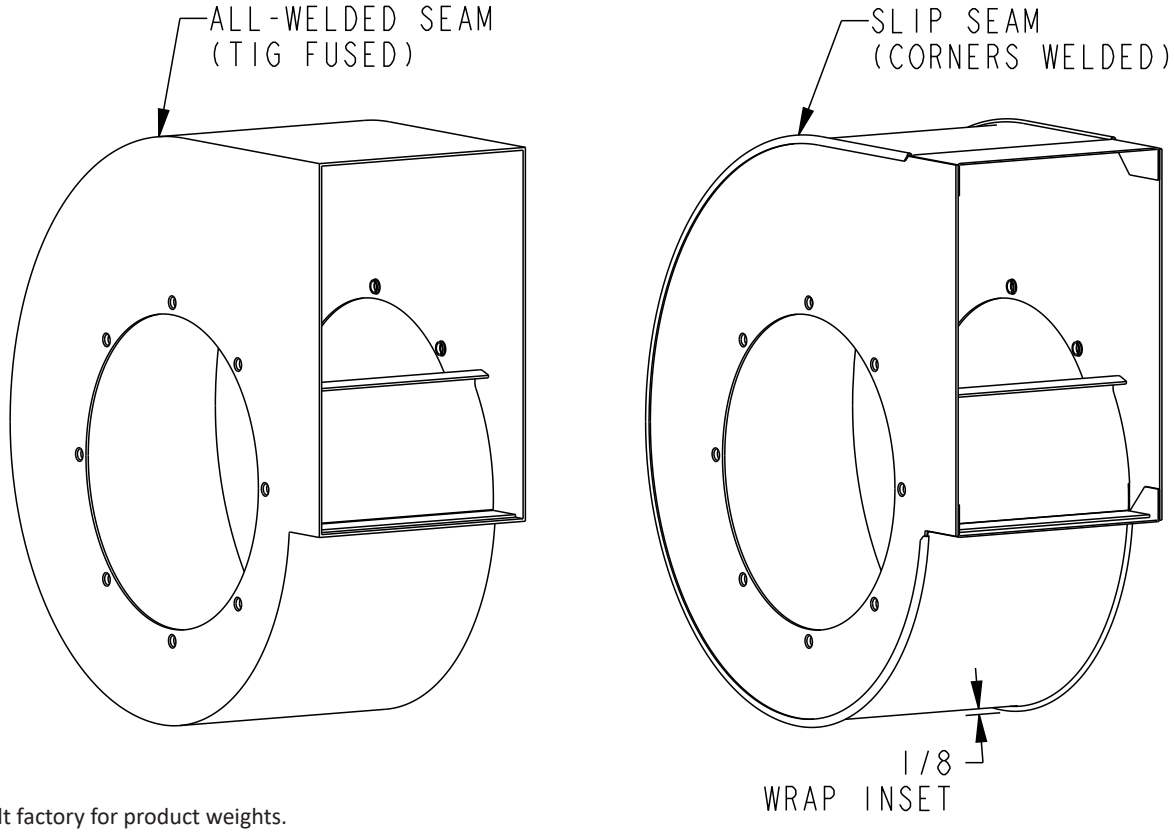


- Consult factory for product weights.
- Material thicknesses are listed by gauge for steels and stainless steels followed by decimal thicknesses in aluminum.

# HOUSINGS: SIDE PLATE MODIFICATIONS

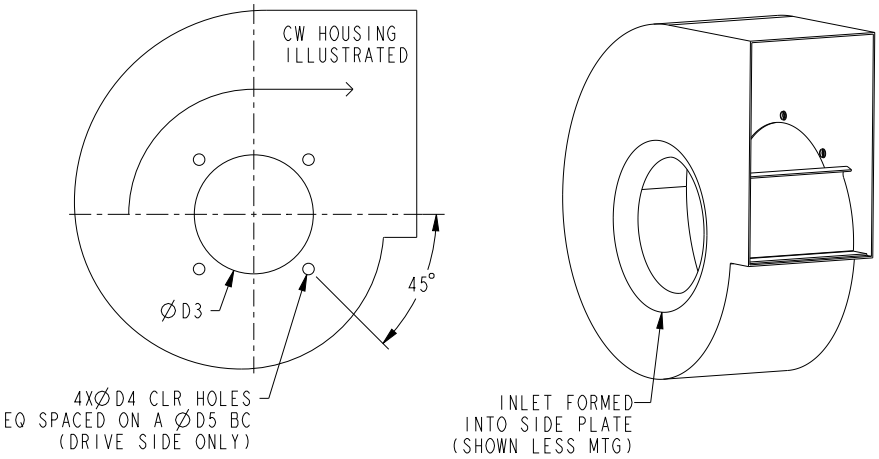


| [P] = DRIVE SIDE PLATE MODIFICATIONS (*ROTATION SPECIFIED BY DRIVE SIDE PLATE*) | | | | |
|---|---|---|---|---|
| **DRIVE SIDE PLATE MODIFICATIONS** | **D3** | **D4** | **D5** | **SYMBOL** |
| STANDARD ID / STANDARD DBC / MOUNTING HOLES | - | - | - | X |
| 42-48 CFACE | 3 | 0.31 | 3-¾ | A |
| 56-184 (NOT 182T OR 184T) CFACE | 4-½ | 0.43 | 5-⅞ | B |
| 182T-256T CFACE | 2 | 0.53 | 7-¼ | C |
| 284-286 CFACE | 2-½ | 0.53 | 9 | D |
| 324-405 CFACE | 3-½ | 0.65 | 11 | E |
| 1-½" ID, WITH STANDARD MOUNTING HOLES | 1-½ | - | - | F |
| 2" ID, WITH STANDARD MOUNTING HOLES | 2 | - | - | G |
| 2-½" ID, WITH STANDARD MOUNTING HOLES | 2-½ | - | - | H |
| 2-¾" ID, WITH STANDARD MOUNTING HOLES | 2-¾ | - | - | J |
| 3-½" ID, WITH STANDARD MOUNTING HOLES | 3-½ | - | - | K |
| STANDARD ID / STANDARD DBC / MTG STUDS | - | - | - | M |
| 1-½" ID / STANDARD DBC / MTG STUDS | 1-½ | - | - | N |
| 2" ID / STANDARD DBC / MTG STUDS | 2 | - | - | P |
| 2-½" ID / STANDARD DBC / MTG STUDS | 2-½ | - | - | Q |
| 2-¾" ID / STANDARD DBC / MTG STUDS | 2-¾ | - | - | R |
| 3-½" ID / STANDARD DBC / MTG STUDS | 3-½ | - | - | S |
| STANDARD ID / NO MOUNTING HOLES OR STUDS | - | - | - | T |
| 1-½" ID / NO MOUNTING HOLES OR STUDS | 1-½ | - | - | U |
| 2" ID / NO MOUNTING HOLES OR STUDS | 2 | - | - | V |
| 2-½" ID / NO MOUNTING HOLES OR STUDS | 2-½ | - | - | W |
| 2-¾" ID / NO MOUNTING HOLES OR STUDS | 2-¾ | - | - | Y |
| 3-½" ID / NO MOUNTING HOLES OR STUDS | 3-½ | - | - | Z |
| CLOSED (NO ID OR MOUNTING HOLES) | - | - | - | 0 |

| [P] = INLET SIDE PLATE MODIFICATIONS (*ROTATION SPECIFIED BY DRIVE SIDE PLATE*) | |
|---|---|
| STANDARD DRIVE SIDE / BUILT-IN CONE (NO MTG) - FOR "LOW PROFILE" B-SERIES FORMED CONES | 3 |
| STANDARD DRIVE SIDE / BUILT-IN CONE (MTG HOLES) - FOR "LOW PROFILE" B-SERIES FORMED CONES | 4 |
| STANDARD DRIVE SIDE / WELD-IN CONE (NO MTG) - FOR "STANDARD" B-SERIES SPUN CONES | 5 |
| STANDARD DRIVE SIDE / WELD-IN CONE (MTG HOLES) - FOR "STANDARD" B-SERIES SPUN CONES | 6 |

# Housings: Discharge Modifications

| [DD] = DISCHARGE OPTIONS (FLANGES & ROUND TRANSITIONS) | | | |
|---|---|---|---|
| MODIFCATION DESCRIPTION - FLANGES | SYMBOL BY THICKNESS (T) | | |
| | 16 GA/.063 | 14 GA/.090 | 12 GA/.125 |
| FLUSH DISCHARGE FLANG WITH 5⁄16” CLEARANCE HOLES | F6 | F4 | F2 |
| ½” INSET DISCHARGE FLANGE WITH 5⁄16” CLEARANCE HOLES | FA | FB | FC |
| FLUSH DISCHARGE FLANGE WITH 5⁄16” CLEARANCE HOLES & 20 GA SCREEN | G6 | G4 | G2 |
| FLUSH DISCHARGE FLANGE WITH ¼-20 MOUNTING HOLES | J6 | J4 | J2 |
| ½” INSET DISCHARGE FLANGE WITH ¼-20 MOUNTING HOLES | JA | JB | JC |
| FLUSH DISCHARGE FLANGE WITH ¼-20 MOUNTING HOLES & 20 GA SCREEN | K6 | K4 | K2 |
| MODIFCATION DESCRIPTION - FLANGES SYMBOL | SYMBOL- FILL [X] FROM NEXT TABLE | | |
| | DISCHARGE END | | |
| RECTANGLE-TO-ROUND TRANSITION - ANGLE RING END | D[X] | | |
| RECTANGLE-TO-ROUND TRANSITION - SLIP RING END | Q[X] | | |

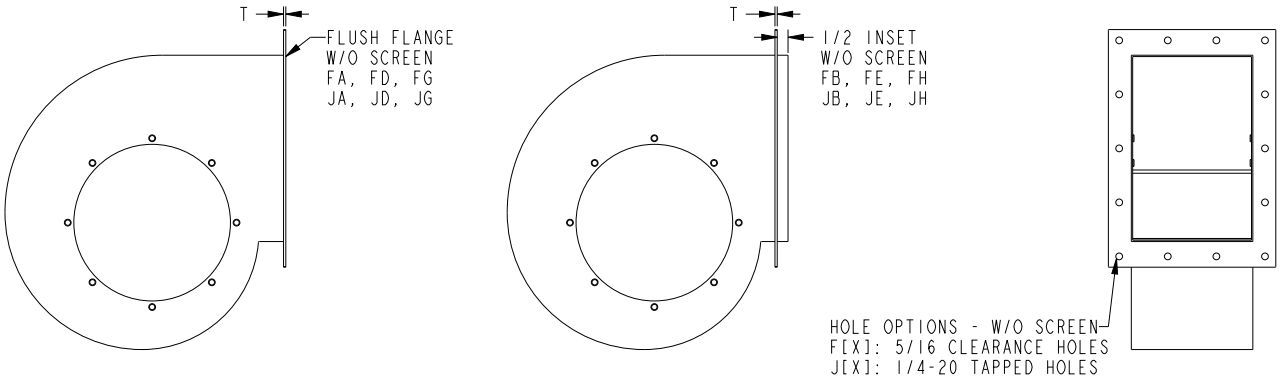


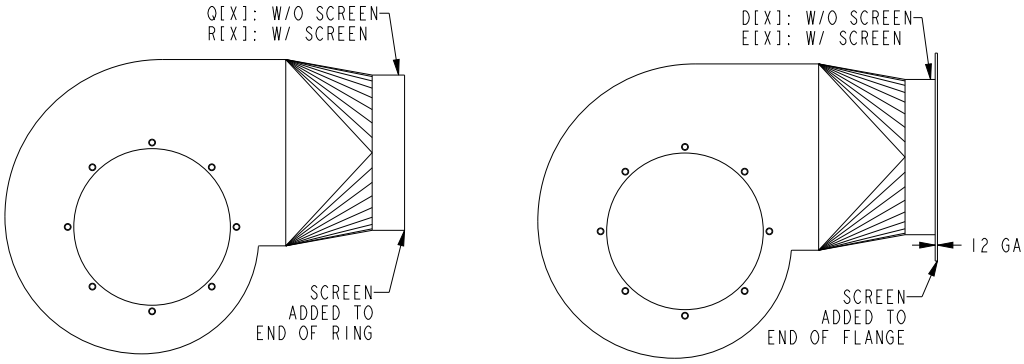

# B-Series Arr. 4 Pedestals

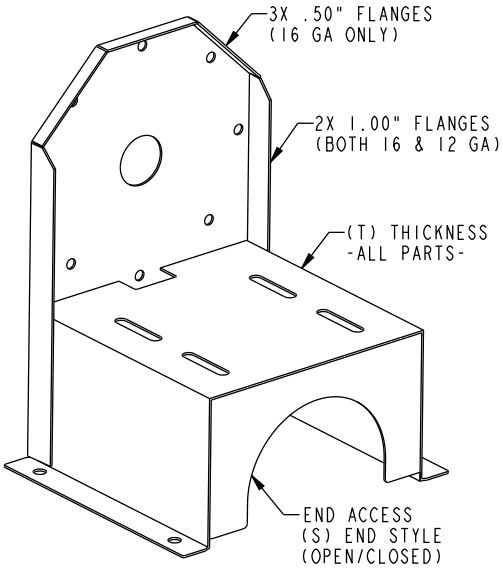


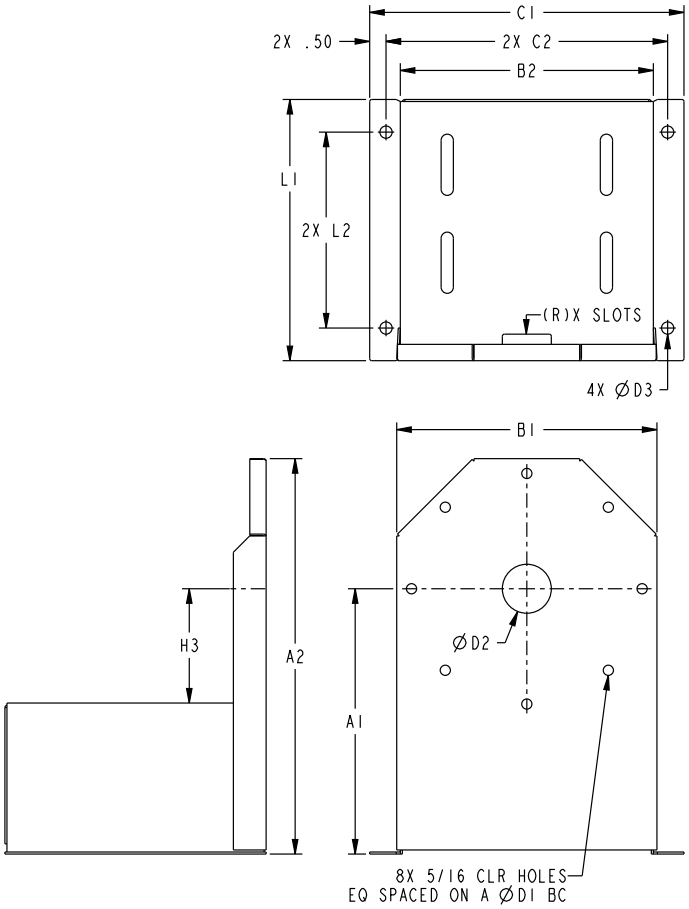


| STANDARD PEDESTAL DIMENSIONS (AVAILABLE IN STEEL & STAINLESS STEELS) | | | | | | | | | | | | | | | | | | |
|---|---|---|---|---|---|---|---|---|---|---|---|---|---|---|---|---|---|---|
| IMP DIA | AXIS | DBC | HT | PART WIDTHS | | | | MTG | THK | ID | LGTHS | | END | SLTS | HT | HS SIZE | MOTOR FRAME | CATALOG # |
| | A1 | D1 | A2 | B1 | B2 | C1 | C2 | D3 | T | D2 | L1 | L2 | S | R | H3 | | | [ROOT] |
| 5 | 6-¾ | 5-13/16 | 10-⅛ | 6-¾ | 6-⅜ | 8-½ | 7-½ | 13/32 | 16 GA | 1 | 8 | 6 | Open | 1 | 3 | 4-¾ | 48 ONLY | P4Z080A-6 |
| | | | | | | | | | | 1-¼ | 10 | 8 | Open | 0 | 3-½ | 4-¾ | 56 ONLY | P4Z080B-6 |
| | | | | | | | | | | 1-½ | 10 | 8 | Open | 0 | 3-½ | 4-¾ | 56-145T | P4Z080D-6 |
| 5-½ | 7-¼ | 6-⅛ | 10-⅞ | 7-¼ | 6-⅞ | 9 | 8 | 13/32 | 16 GA | 1 | 8 | 6 | Open | 1 | 3 | 4-¾ | 48 ONLY | P4Z088A-6 |
| | | | | | | | | | | 1-¼ | 10 | 8 | Open | 0 | 3-½ | 4-¾ | 56 ONLY | P4Z088B-6 |
| | | | | | | | | | | 1-½ | 10 | 8 | Open | 0 | 3-½ | 4-¾ | 56-145T | P4Z088D-6 |
| 6-¼ | 7-¾ | 7-1/16 | 11-¾ | 8 | 7-⅝ | 9-¾ | 8-¾ | 13/32 | 16 GA | 1 | 8 | 6 | Open | 0 | 3 | 4-¾ | 48 ONLY | P4Z100A-6 |
| | | | | | | | | | | 1-¼ | 10 | 8 | Open | 1 | 3-½ | 4-¾ | 56 ONLY | P4Z100B-6 |
| | | | | | | | | | | 1-½ | 10 | 8 | Open | 1 | 3-½ | 4-¾ | 56-145T | P4Z100D-6 |
| 7 | 8-¾ | 7-13/16 | 13-¼ | 9 | 8-⅝ | 10-¾ | 9-¾ | 13/32 | 16 GA | 1 | 8 | 6 | Closed | 2 | 3 | 4-¾ | 48 ONLY | P4Z112A-6 |
| | | | | | | | | | | 1-¼ | 10 | 8 | Open | 0 | 3-½ | 4-¾ | 56 ONLY | P4Z112B-6 |
| | | | | | | | | | | 1-½ | 10 | 8 | Open | 0 | 3-½ | 4-¾ | 56-145T | P4Z112D-6 |
| 7-11/16 | 9-¼ | 8-⅝ | 14-⅛ | 9-¾ | 9-⅜ | 11-½ | 10-½ | 13/32 | 16 GA | 1 | 8 | 6 | Closed | 2 | 3 | 4-¾ | 48 ONLY | P4Z123A-6 |
| | | | | | | | | | | 1-¼ | 10 | 8 | Closed | 0 | 3-½ | 4-¾ | 56 ONLY | P4Z123B-6 |
| | | | | | | | | | | 1-½ | 10 | 8 | Closed | 0 | 3-½ | 4-¾ | 56-145T | P4Z123D-6 |
| | | | | | | | | | | 1-¾ | 12 | 10 | Open | 1 | 4-½ | 6 | 182-184T | P4Z123E-6 |

| IMP DIA | AXIS | DBC | HT | PART WIDTHS | | | | MTG | THK | ID | LGTHS | | END | SLTS | HT | HS SIZE | MOTOR FRAME | PART # |
|---|---|---|---|---|---|---|---|---|---|---|---|---|---|---|---|---|---|---|
| | A1 | D1 | A2 | B1 | B2 | C1 | C2 | D3 | T | D2 | L1 | L2 | S | R | H3 | | | [ROOT] |
| 8-3/8 | 10 | 9-5/16 | 15-1/8 | 10-1/4 | 9-7/8 | 12 | 11 | 13/32 | 16 GA | 1 | 8 | 6 | Closed | 2 | 3 | 4-3/4 | 48 ONLY | P4Z134A-6 |
| | | | | | | | | | | 1-1/4 | 10 | 8 | Closed | 2 | 3-1/2 | 4-3/4 | 56 ONLY | P4Z134B-6 |
| | | | | | | | | | | 1-1/2 | 10 | 8 | Closed | 2 | 3-1/2 | 4-3/4 | 56-145T | P4Z134D-6 |
| | | | | | | | | | | 1-3/4 | 12 | 10 | Open | 1 | 4-1/2 | 6 | 182-184T | P4Z134E-6 |
| 9-3/16 | 10-3/4 | 10 | 16-1/4 | 11 | 10-3/4 | 12-3/4 | 11-3/4 | 13/32 | 16 GA | 1 | 8 | 6 | Closed | 0 | 3 | 4-3/4 | 48 | P4Z147A-6 |
| | | | | | | | | | | 1-1/4 | 10 | 8 | Closed | 2 | 3-1/2 | 4-3/4 | 56 ONLY | P4Z147B-6 |
| | | | | | | | | | | 1-1/2 | 10 | 8 | Closed | 2 | 3-1/2 | 4-3/4 | 56-145T | P4Z147D-6 |
| | | | | | | | | | | 1-3/4 | 12 | 10 | Closed | 0 | 4-1/2 | 6 | 182-184T | P4Z147E-6 |
| | | | | | | | | 17/32 | 12 GA | 2-1/4 | 14 | 12 | Open | 1 | 5-1/4 | 6 | 213-215T | P4Z147G-2 |
| | | | 17-7/8 | 14-1/4 | 14 | 16 | 15 | 21/32 | 12 GA | 2-1/2 | 18 | 16 | Open | 0 | 6-1/4 | 6 | 254-256T | P4Z147J-2 |
| 9-15/16 | 11-3/4 | 11 | 17-3/4 | 12 | 11-3/4 | 13-3/4 | 12-3/4 | 13/32 | 16 GA | 1 | 8 | 6 | Closed | 0 | 3 | 4-3/4 | 48 | P4Z159A-6 |
| | | | | | | | | | | 1-1/4 | 10 | 8 | Closed | 2 | 3-1/2 | 4-3/4 | 56 ONLY | P4Z159B-6 |
| | | | | | | | | | | 1-1/2 | 10 | 8 | Closed | 2 | 3-1/2 | 4-3/4 | 56-145T | P4Z159D-6 |
| | | | | | | | | | | 1-3/4 | 12 | 10 | Closed | 0 | 4-1/2 | 6 | 182-184T | P4Z159E-6 |
| | | | | | | | | 17/32 | 12 GA | 2-1/4 | 14 | 12 | Closed | 1 | 5-1/4 | 6 | 213-215T | P4Z159G-2 |
| | | | 18-7/8 | 14-1/4 | 14 | 16 | 15 | 21/32 | 12 GA | 2-1/2 | 18 | 16 | Closed | 0 | 6-1/4 | 6 | 254-256T | P4Z159J-2 |
| 10-5/8 | 12-1/4 | 11-3/8 | 18-1/2 | 12-1/2 | 12-1/4 | 14-1/4 | 13-1/4 | 13/32 | 16 GA | 1-1/4 | 10 | 8 | Closed | 0 | 3-1/2 | 6 | 56 ONLY | P4Z170B-6 |
| | | | | | | | | | | 1-1/2 | 10 | 8 | Closed | 0 | 3-1/2 | 6 | 56-145T | P4Z170D-6 |
| | | | | | | | | | | 1-3/4 | 12 | 10 | Closed | 0 | 4-1/2 | 6 | 182-184T | P4Z170E-6 |
| | | | | | | | | 17/32 | 12 GA | 2-1/4 | 14 | 12 | Closed | 0 | 5-1/4 | 6 | 213-215T | P4Z170G-2 |
| | | | 20-3/8 | 16-1/4 | 16 | 18 | 17 | 21/32 | 12 GA | 2-1/2 | 18 | 16 | Closed | 0 | 6-1/4 | 6 | 254-256T | P4Z170J-2 |
| | | | | | | | | | | 3 | 20 | 18 | Closed | 0 | 7 | 6 | 284-286TS | P4Z170K-2 |
| | | | | | | | | | | 3-1/8 | 22 | 20 | Closed | 0 | 8 | 6 | 324-326TS | P4Z170M-2 |
| 11-3/16 | 13-1/4 | 12-1/4 | 19-7/8 | 13-1/4 | 13 | 15 | 14 | 13/32 | 16 GA | 1-1/4 | 10 | 8 | Closed | 0 | 3-1/2 | 6 | 56 ONLY | P4Z179B-6 |
| | | | | | | | | | | 1-1/2 | 10 | 8 | Closed | 0 | 3-1/2 | 6 | 56-145T | P4Z179D-6 |
| | | | | | | | | | | 1-3/4 | 12 | 12 | Closed | 2 | 4-1/2 | 6 | 182-184T | P4Z179E-6 |
| | | | | | | | | 17/32 | 12 GA | 2-1/4 | 14 | 14 | Closed | 0 | 5-1/4 | 7-1/2 | 213-215T | P4Z179G-2 |
| | | | | | | | | | | 2-1/2 | 18 | 18 | Closed | 1 | 6-1/4 | 7-1/2 | 254-256T | P4Z179J-2 |
| | | | 21-3/8 | 18-1/4 | 18 | 20 | 19 | 21/32 | 12 GA | 3 | 20 | 20 | Closed | 0 | 7 | 7-1/2 | 284-286TS | P4Z179K-2 |
| | | | | | | | | | | 3-1/8 | 22 | 22 | Closed | 0 | 8 | 7-1/2 | 324-326TS | P4Z179M-2 |
| 12-3/16 | 14 | 13-1/8 | 21-1/8 | 14-1/4 | 14 | 16 | 15 | 13/32 | 16 GA | 1-1/4 | 10 | 8 | Closed | 0 | 3-1/2 | 6 | 56 ONLY | P4Z195B-6 |
| | | | | | | | | | | 1-1/2 | 10 | 8 | Closed | 0 | 3-1/2 | 6 | 56-145T | P4Z195D-6 |
| | | | | | | | | | | 1-3/4 | 12 | 10 | Closed | 2 | 4-1/2 | 6 | 182-184T | P4Z195E-6 |
| | | | | | | | | 17/32 | 12 GA | 2-1/4 | 14 | 12 | Closed | 0 | 5-1/4 | 7-1/2 | 213-215T | P4Z195G-2 |
| | | | | | | | | | | 2-1/2 | 18 | 16 | Closed | 1 | 6-1/4 | 7-1/2 | 254-256T | P4Z195J-2 |
| | | | | | | | | | | 3 | 20 | 18 | Closed | 0 | 7 | 7-1/2 | 284-286TS | P4Z195K-2 |
| | | | 22-5/8 | 17-1/4 | 17 | 20 | 18-1/2 | 21/32 | 12 GA | 3-1/8 | 22 | 20 | Closed | 0 | 8 | 7-1/2 | 324-326TS | P4Z195M-2 |
| | | | | | | | | | | 3-1/2 | 24 | 22 | Closed | 0 | 9 | 7-1/2 | 364-365TS | P4Z195N-2 |

| IMP DIA | AXIS | DBC | HT | PART WIDTHS | | | | MTG | THK | ID | LGTHS | | END | SLTS | HT | HS SIZE | MOTOR FRAME | PART # |
|---|---|---|---|---|---|---|---|---|---|---|---|---|---|---|---|---|---|---|
| | A1 | D1 | A2 | B1 | B2 | C1 | C2 | D3 | T | D2 | L1 | L2 | S | R | H3 | | | [ROOT] |
| 13-½ | 14-¾ | 14-¾ | 22-⅝ | 15-¾ | 15-½ | 18-½ | 17 | 13/32 | 12 GA | 1-½ | 10 | 8 | Closed | 0 | 3-½ | 6 | 56-145T | PBZ216D-2 |
| | | | | | | | | | | 1-¾ | 12 | 10 | Closed | 2 | 4-½ | 6 | 182-184T | PBZ216E-2 |
| | | | | | | | | | | 2-¼ | 14 | 12 | Closed | 2 | 5-¼ | 7-½ | 213-215T | PBZ216G-2 |
| | | | | | | | | 17/32 | | 2-½ | 18 | 16 | Closed | 0 | 6-¼ | 7-½ | 254-256T | PBZ216J-2 |
| | | | | | | | | | | 3 | 20 | 18 | Closed | 1 | 7 | 7-½ | 284-286TS | PBZ216K-2 |
| | | | 23-11/16 | 17-⅞ | 17-½ | 20-½ | 19 | 21/32 | 10 GA | 3-⅛ | 22 | 20 | Closed | 1 | 8 | 7-½ | 324-326TS | PBZ216M-1 |
| | | | | | | | | | | 3-½ | 24 | 22 | Closed | 0 | 9 | 7-½ | 364-365TS | PBZ216N-1 |
| 15 | 16-¾ | 16-½ | 25-⅝ | 17-¾ | 17-½ | 20-½ | 19 | 13/32 | 12 GA | 1-½ | 10 | 8 | Closed | 0 | 3-½ | 6 | 56-145T | PBZ240D-2 |
| | | | | | | | | | | 1-¾ | 12 | 10 | Closed | 0 | 4-½ | 6 | 182-184T | PBZ240E-2 |
| | | | | | | | | | | 2-¼ | 14 | 12 | Closed | 0 | 5-¼ | 7-½ | 213-215T | PBZ240G-2 |
| | | | | | | | | 17/32 | | 2-½ | 18 | 16 | Closed | 2 | 6-¼ | 7-½ | 254-256T | PBZ240J-2 |
| | | | | | | | | | | 3 | 20 | 18 | Closed | 0 | 7 | 7-½ | 284-286TS | PBZ240K-2 |
| | | | 25-¾ | 18 | | | | 21/32 | 10 GA | 3-⅛ | 22 | 20 | Closed | 1 | 8 | 7-½ | 324-326TS | PBZ240M-1 |
| | | | | | | | | | | 3-½ | 24 | 22 | Closed | 1 | 9 | 7-½ | 364-365TS | PBZ240N-1 |

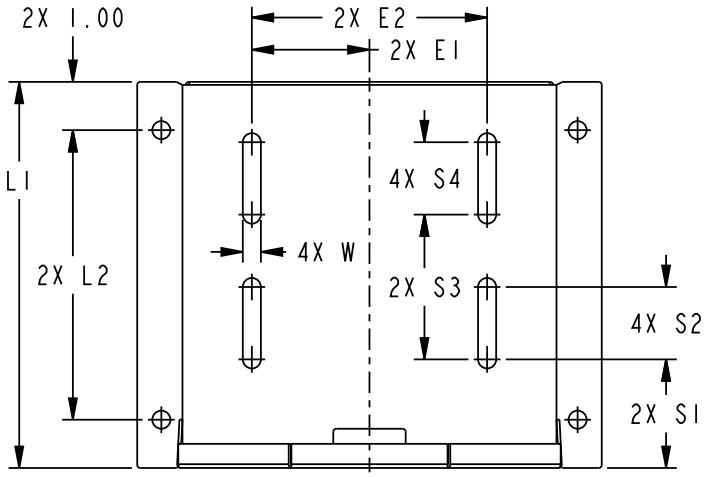


| FRAME RANGE | FRAME BASED DIMENSIONS | | | | | | | | | |
|---|---|---|---|---|---|---|---|---|---|---|
| | L1 | L2 | S1 | S2 | S3 | S4 | E1 | E2 | W | H3 |
| 48 ONLY | 8 | 6 | 2-¼ | 1-½ | 2-¾ | 1-½ | 2-⅛ | 4-¼ | 11/32 | 3 |
| 56 ONLY | 10 | 8 | 2-½ | 1-½ | 3 | 1-½ | 2-7/16 | 4-⅞ | 11/32 | 3-½ |
| 56-145T | 10 | 8 | 2 | 2 | 3-½ | 2-½ | 2-¾ | 5-½ | 11/32 | 3-½ |
| 182-184T | 12 | 10 | 2-¼ | 2 | 4-½ | 3 | 3-¾ | 7-½ | 13/32 | 4-½ |
| 213-215T | 14 | 12 | 3 | 2 | 5-½ | 3-½ | 4-¼ | 8-½ | 13/32 | 5-¼ |
| 254-256T | 18 | 16 | 3-¾ | 2-¼ | 8-¼ | 4 | 5 | 10 | 17/32 | 6-¼ |
| 284-286TS | 20 | 18 | 4-¼ | 2-½ | 9-½ | 4 | 5-½ | 11 | 17/32 | 7 |
| 324-326TS | 22 | 20 | 4-¾ | 2-¾ | 10-½ | 4-¼ | 6-¼ | 12-½ | 21/32 | 8 |
| 364-365TS | 24 | 22 | 5-⅜ | 3 | 11-¼ | 4 | 7 | 14 | 21/32 | 9 |

- Consult factory for product weights.