Janette
TURBO-BLOWERS

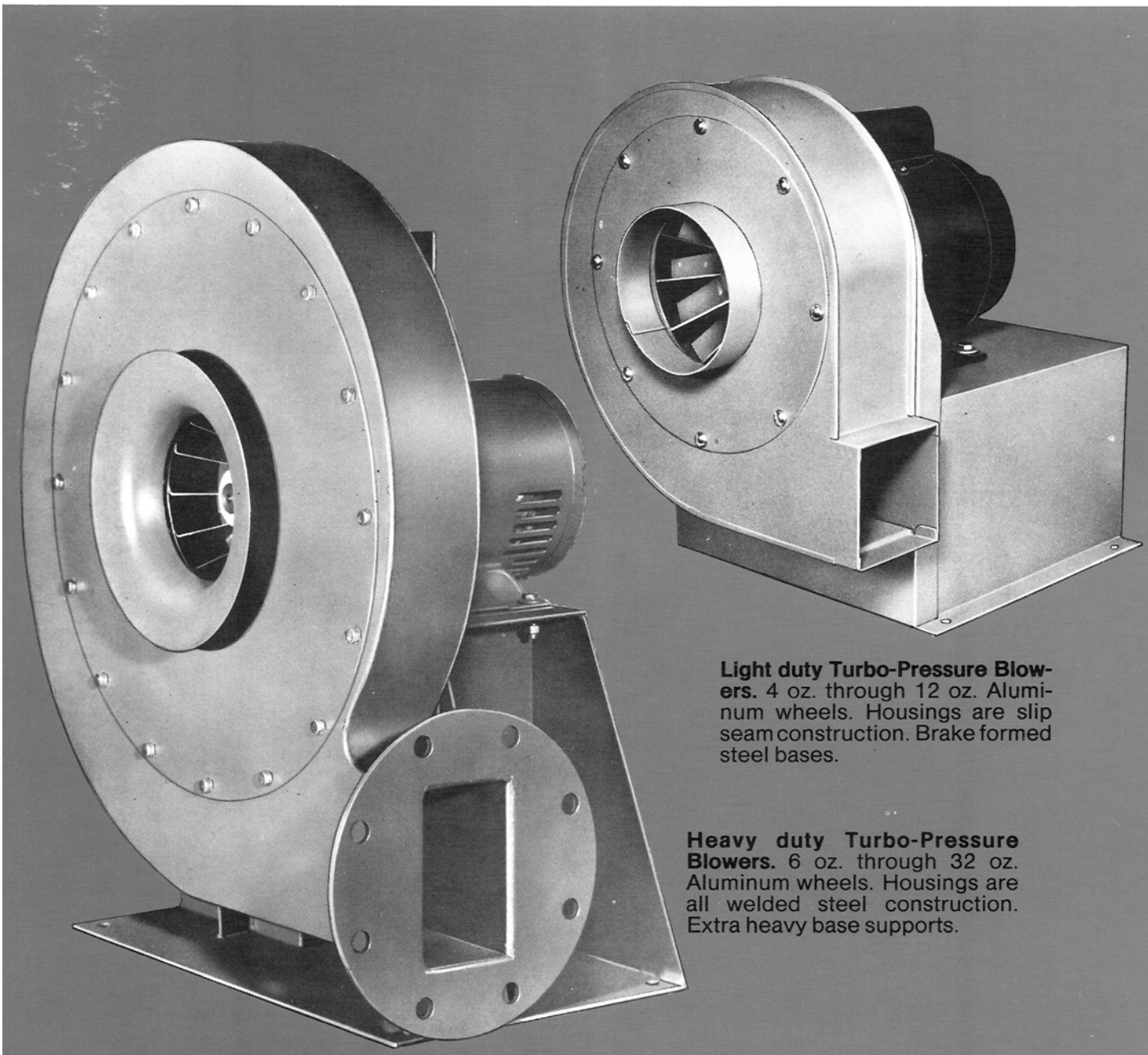

Light duty Turbo-Pressure Blowers. 4 oz. through 12 oz. Aluminum wheels. Housings are slip seam construction. Brake formed steel bases.

Heavy duty Turbo-Pressure Blowers. 6 oz. through 32 oz. Aluminum wheels. Housings are all welded steel construction. Extra heavy base supports.

JAN-AIR, inc.

FACTORY AND GENERAL OFFICES
10815 COMMERCIAL STREET / RICHMOND, ILLINOIS 60071
PHONE 815-678-6311

JAN-AIR, inc.
Manufacturers of Janette Blower Wheels
GENERAL OFFICE AND FACTORY: RICHMOND, ILLINOIS

LIGHT DUTY
TURBO PRESSURE
BLOWERS

SPECIFICATIONS AND DIMENSIONS

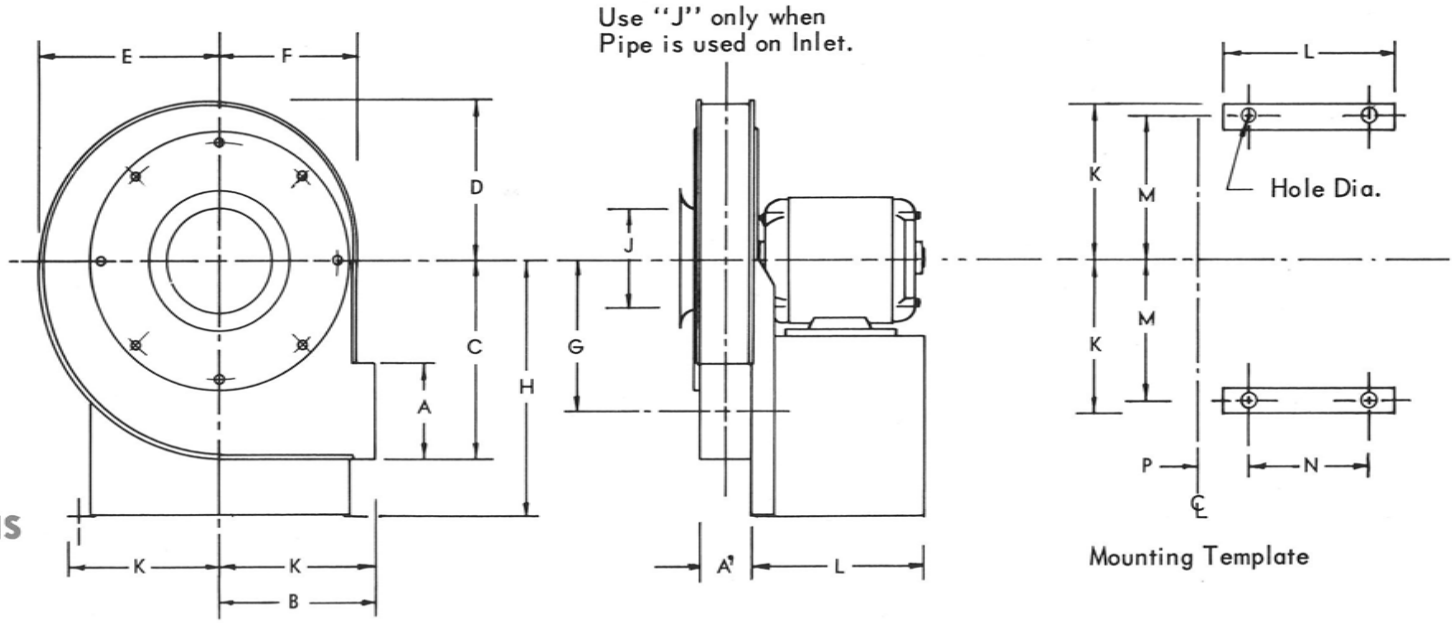

Pressures	Catalog Number	Capacity C.F.M. Open Motor	Motor H.P.	Discharge Dimension A	Discharge Dimension A'	B	C	D	E	F	G	H	J	K	M	L	N	* P	Hole Dia.
						All Dimensions Are In Inches													
4 oz. 6.928" of Water	13-4-1/3	168	1/3	3	3-1/4	8	9-3/8	7-7/8	8-5/8	7	7-7/8	12-1/2	5	6-3/4	8-1/2	6-1/4	7	+2-1/2	7/16
	13-4-1/2	252	1/2	4	3-3/4	8	9-3/8	7-7/8	8-5/8	7	7-3/8	12-1/2	5	6-3/4	8-1/2	6-1/4	7	+2-3/4	7/16
6 oz. 10.392" of Water	13-6-1/3	112	1/3	3	2	9	10-1/2	8-7/8	9-3/4	8	9	13-1/2	4	6-3/4	8-1/2	6-1/4	7	+1-7/8	7/16
	13-6-1/2	168	1/2	4	2-1/4	9	10-1/2	8-7/8	9-3/4	8	8-1/2	13-1/2	4	6-3/4	8-1/2	6-1/4	7	+2	7/16
	13-6-3/4	252	3/4	4	4-1/4	9	10-1/2	8-7/8	9-3/4	8	8-1/2	13-1/2	4	6-3/4	8-1/2	6-1/4	7	+3	7/16
	13-6-1	336	1	6	4-5/8	9	10-1/2	8-7/8	9-3/4	8	8-1/2	13-1/2	8	6-3/4	8-1/2	6-1/4	7	+3-3/16	7/16
8 oz. 13.856" of Water	13-8-3/4	189	3/4	4	3-1/4	10	11-11/16	10	10-7/8	9	9-11/16	14-1/2	6	6-1/4	8-1/2	5-3/4	7	+2-1/2	7/16
	13-8-1	252	1	4	3-1/4	10	12-5/16	10-7/16	11-3/8	9-1/2	9-5/16	15	6	6-1/4	8-1/2	5-3/4	7	+2-5/8	7/16
10 oz. 17.320" of Water	13-10-3/4	151	3/4	4	3-5/16	10-1/2	12-3/16	10-7/16	11-3/8	9-1/2	10-3/16	15	6	6-3/4	8-1/2	6-1/4	7	+2-17/32	7/16
	13-10-1	202	1	4	3-1/2	10-1/2	12-3/16	10-7/16	11-3/8	9-1/2	10-3/16	15	6	6-3/4	8-1/2	6-1/4	7	+2-5/8	7/16
12 oz. 20.784" of Water	13-12-1	168	1	4	2-3/4	11-1/2	13-1/2	11-5/8	12-5/8	10-5/8	11-1/2	16-1/2	6	6-3/4	8-1/2	6-1/4	7	+2-1/4	7/16

* PLUS INDICATES CENTER LINE TO LEFT OF MOUNTING HOLE (AS SHOWN)
MINUS INDICATES CENTER LINE TO RIGHT OF MOUNTING HOLE.

JAN-AIR, inc.
Manufacturers of Janette Blower Wheels
GENERAL OFFICE AND FACTORY: RICHMOND, ILLINOIS

Janette

HEAVY DUTY
TURBO PRESSURE
BLOWERS
SPECIFICATIONS AND DIMENSIONS

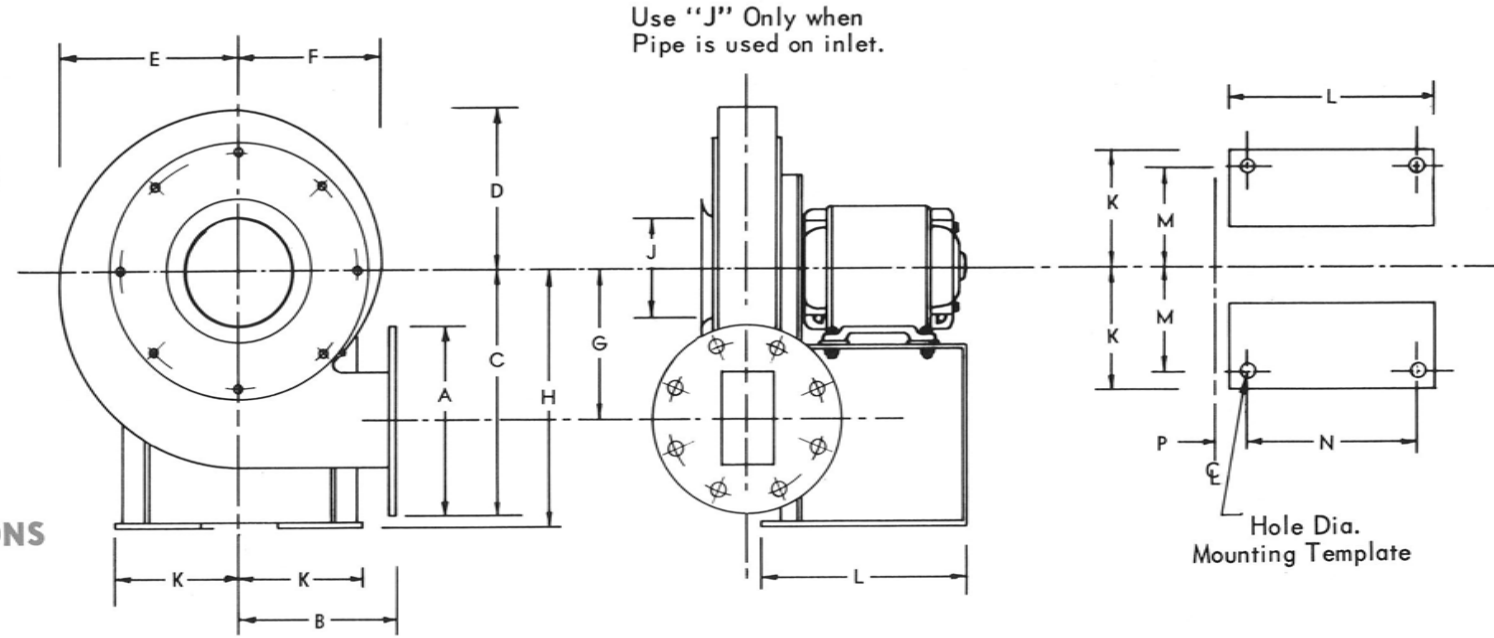

Pressures	Catalog Number	Capacity C.F.M. Open Motor	Motor H.P.	Flange Discharge O.D. A	All Dimensions In Inches															No. Holes
					Pipe Size A	B	C	D	E	F	G	H	J	K	L	M	N	* P	Hole Dia.	
6 oz. 10.392" of Water	13-6-1-1/2	546	1-1/2	11	6	9-1/2	13-3/8	9-1/4	10-1/8	8-3/8	7-7/8	14	8	8	13	7-1/8	11-1/4	+1/8	9/16	4
8 oz. 13.856" of Water	13-8-1-1/2	378	1-1/2	11	6	10-1/2	14-11/16	10-7/16	10-3/8	9-1/2	9-3/16	15-1/2	8	9	13	8-1/8	11-1/4	-7/8	9/16	4
	13-8-2	505	2	11	6	10-1/2	14-11/16	10-7/16	10-3/8	9-1/2	9-3/16	15-1/2	8	9	13	8-1/8	11-1/4	-9/16	9/16	4
	13-8-3	757	3	13-1/2	8	10	14-7/16	10	10-7/8	9	8-11/16	15	8	8-1/2	13	7-5/8	11-1/4	-3/16	9/16	4
	13-8-5	1262	5	13-1/2	8	10-1/2	14-15/16	10-7/16	11-3/8	9-1/2	8-3/16	15-1/2	8	9	13	8-1/8	11-1/4	-5/32	9/16	4
	13-8-7-1/2	1692	7-1/2	16	10	11	16	11-1/8	12-1/8	10-1/8	8	16-1/2	9	9-1/2	13	8-5/8	11-1/4	+2-7/16	9/16	4
	13-8-10	2523	10	16	10	11-1/2	16-1/2	11-5/8	12-5/8	10-5/8	8-1/2	17-1/2	9	10	17	9-1/8	15-1/4	+1-7/16	9/16	4
10 oz. 17.320" of Water	13-10-1-1/2	303	1-1/2	11	6	10-1/2	14-11/16	10-7/16	11-3/8	9-1/2	9-3/16	15-1/2	6	9	13	8-1/8	11-1/4	-1/2	9/16	4
	13-10-2	404	2	11	6	10-1/2	14-11/16	10-7/16	11-3/8	9-1/2	9-3/16	15-1/2	6	9	13	8-1/8	11-1/4	-3/8	9/16	4
	13-10-3	605	3	13-1/2	8	10-1/2	14-15/16	10-7/16	11-3/8	9-1/2	8-3/16	15-1/2	8	9	13	8-1/8	11-1/4	-1/8	9/16	4
	13-10-5	1009	5	13-1/2	8	11	15-3/4	11-1/8	12-1/8	10-1/8	9	16-1/2	8	9-1/2	13	8-5/8	11-1/4	+1/8	9/16	4
	13-10-7-1/2	1514	7-1/2	16	10	11-1/2	16-1/2	11-5/8	12-5/8	10-5/8	8-1/2	17	10	10	13	9-1/8	11-1/4	+1/4	9/16	4
	13-10-10	2018	10	16	10	11-1/2	16-1/2	11-5/8	12-5/8	10-5/8	8-1/2	17	10	10	17	8-7/8	15-1/4	-5/8	9/16	4
	13-10-15	3027	15	19	12	11-1/2	17	11-5/8	12-5/8	10-5/8	7-1/2	17-1/2	12	10	17	9-1/8	15-1/4	+1-7/16	9/16	4
12 oz. 20.784" of Water	13-12-1-1/2	252	1-1/2	9	4	11-1/2	16	11-5/8	12-5/8	10-5/8	11-1/2	16-1/2	6	10	13	9-1/8	11-1/4	-1-1/8	9/16	4
	13-12-2	336	2	11	6	11-1/2	16	11-5/8	12-5/8	10-5/8	10-1/2	16-1/2	6	10	13	9-1/8	11-1/4	-3/4	9/16	4
	13-12-3	505	3	11	6	11-1/2	16	11-5/8	12-5/8	10-5/8	10-1/2	16-1/2	6	10	13	9-1/8	11-1/4	-3/8	9/16	4
	13-12-5	841	5	13-1/2	8	11-1/2	16-1/4	11-5/8	12-5/8	10-5/8	9-1/2	17	8	10	13	9-1/8	11-1/4	+1/2	9/16	4
	13-12-7-1/2	1262	7-1/2	13-1/2	8	11-1/2	16-1/4	11-5/8	12-5/8	10-5/8	9-1/2	17	8	10	13	9-1/8	11-1/4	+5/8	9/16	4
	13-10-10	1682	10	16	12	12-1/2	16-5/16	12-3/8	13-3/8	11-1/4	8-5/16	17	12	10-1/2	17	9-5/8	15-1/4	+7/16	9/16	4
	13-10-15	2523	15	16	12	13	16-13/16	12-7/8	13-7/8	11-3/4	8-13/16	17-1/2	10	11	17	10-1/8	15-1/4	+5/8	9/16	4

* PLUS INDICATES CENTER LINE TO LEFT OF MOUNTING HOLE (AS SHOWN) MINUS INDICATES CENTER LINE TO RIGHT OF MOUNTING HOLE.

Pressures	Catalog Number	Capacity C.F.M. Open Motor	Motor H.P.	Flange Discharge O.D. A	All Dimensions In Inches															
					Pipe Size A	B	C	D	E	F	G	H	J	K	L	M	N	* P	Hole Dia.	No. Holes
16 oz. 27.712" of Water	13-16-1	126	1	7-1/2	3	13-1/2	17-7/8	13-1/2	14-5/8	12-3/8	14-1/8	18-1/2	6	11-1/2	13	10-5/8	11-1/4	-1-3/8	9/16	4
	13-16-1-1/2	189	1-1/2	9	4	13-1/2	18-1/8	13-1/2	14-5/8	12-3/8	13-5/8	18-1/2	6	11-1/2	13	10-5/8	11-1/4	-1-1/4	9/16	4
	13-16-2	252	2	9	4	13-1/2	18-1/8	13-1/2	14-5/8	12-3/8	13-5/8	18-1/2	6	11-1/2	13	10-5/8	11-1/4	-1-1/16	9/16	4
	13-16-3	379	3	11	6	13-1/2	18-1/8	13-1/2	14-5/8	12-3/8	12-5/8	18-1/2	6	11-1/2	13	10-5/8	11-1/4	-7/8	9/16	4
	13-16-5	631	5	11	6	13	17-5/16	12-7/8	13-7/8	11-3/4	11-13/16	18	6	11	13	10-1/8	11-1/4	-5/8	9/16	4
	13-16-7-1/2	946	7-1/2	13-1/2	8	13	17-9/16	12-7/8	13-7/8	11-3/4	10-13/16	18	8	11	13	10-1/8	11-1/4	-5/16	9/16	4
	13-16-10	1261	10	16	10	13	17-11/16	12-7/8	13-7/8	11-3/4	9-11/16	18-1/2	10	11	17	10-1/8	15-1/4	+3-1/4	9/16	4
	13-16-15	1892	15	19	12	13-1/2	19-1/8	13-1/2	14-5/8	12-3/8	9-5/8	19-1/2	11	11-1/2	17	10-5/8	15-1/4	+5/16	9/16	4
	13-16-20	2523	20	19	12	13-1/2	19-1/8	13-1/2	14-5/8	12-3/8	9-5/8	19-1/2	11	11-1/2	22	10-3/8	19-3/4	+1/4	11/16	4
	13-16-25	3154	25	19	12	13-1/2	19-1/8	13-1/2	14-5/8	12-3/8	9-5/8	19-1/2	11	11-1/2	22	10-3/8	19-3/4	+7/8	11/16	4
20 oz. 34.640" of Water	13-20-2	202	2	19	4	14-1/2	17-7/16	14-5/8	15-7/8	13-1/2	12-15/16	20	6	12-1/2	13	11-5/8	11-1/4	-15/16	9/16	4
	13-20-3	303	3	11	6	14-1/2	19-7/16	14-5/8	15-7/8	13-1/2	13-15/16	20	6	12-1/2	13	11-5/8	11-1/4	-7/8	9/16	4
	13-20-5	505	5	11	6	14-1/2	19-7/16	14-5/8	15-7/8	13-1/2	13-15/16	20	6	12-1/2	13	11-5/8	11-1/4	-11/16	9/16	4
	13-20-7-1/2	757	7-1/2	13-1/2	8	14	18-7/8	14	15-1/8	12-7/8	12-1/8	19-1/2	8	12	13	11-1/8	11-1/4	+7/16	9/16	4
	13-20-10	1009	10	13-1/2	8	14	18-7/8	14	15-1/8	12-7/8	12-1/8	19-1/2	8	12	17	11-1/8	15-1/4	-1/4	9/16	4
	13-20-15	1514	15	16	10	14-1/2	19-15/16	14-5/8	15-7/8	13-1/2	11-15/16	20-1/2	10	12-1/2	17	11-5/8	15-1/4	+1/8	9/16	4
	13-20-20	2018	20	16	10	14-1/2	19-15/16	14-5/8	15-7/8	13-1/2	11-15/16	20-1/2	10	12-1/2	22	11-3/8	19-3/4	-1/8	11/16	4
	13-20-25	3500	25	19	12	14-1/2	20-7/16	14-5/8	15-7/8	13-1/2	10-15/16	21	12	12-1/2	22	11-3/8	19-3/4	+1/8	11/16	4
24 oz. 41.568" of Water	13-24-3	252	3	9	4	15-1/2	20-3/4	15-7/8	17-1/8	14-5/8	16-1/4	21-1/2	6	13-1/2	13	12-5/8	11-1/4	-7/8	9/16	4
	13-24-5	421	5	9	4	15-1/2	20-3/4	15-7/8	17-1/8	14-5/8	16-1/4	21-1/2	6	13-1/2	13	12-5/8	11-1/4	+2-3/16	9/16	4
	13-24-7-1/2	631	7-1/2	11	6	15	19-13/16	15-1/16	16-1/4	13-7/8	14-5/16	20-1/2	6	13	13	12-1/8	11-1/4	-3/8	9/16	4
	13-24-10	841	10	13-1/2	8	15	20-1/16	15-1/16	16-1/4	13-7/8	13-5/16	21	8	13	17	12-1/8	15-1/4	-5/8	9/16	4
	13-24-15	1262	15	13-1/2	8	15	20-1/16	15-1/16	16-1/4	13-7/8	13-5/16	21	8	13	17	12-1/8	15-1/4	-1/8	9/16	4
	13-24-20	1682	20	16	10	15	20-5/16	15-1/16	16-1/4	13-7/8	12-7/16	21	10	13	22	11-7/8	19-3/4	-1-11/64	11/16	4
	13-24-25	2102	25	16	10	15	20-5/16	15-1/16	16-1/4	13-7/8	12-7/16	21	10	13	22	11-7/8	19-3/4	-3/4	11/16	4
28 oz. 48.497" of Water	13-28-3	216	3	9	4	16	21-1/4	16-3/8	17-5/8	15-1/8	16-3/4	22	4	14	13	13-1/8	11-1/4	-1-3/8	9/16	4
	13-28-5	360	5	10	5	16-1/2	21-3/4	16-7/8	18-1/8	15-5/8	16-3/4	22-1/2	5	14-1/2	13	13-5/8	11-1/4	-1-1/4	9/16	4
	13-28-7-1/2	541	7-1/2	11	6	17-1/2	22-9/16	17-9/16	18-7/8	16-1/4	17-1/16	23-1/2	6	15	13	14-1/8	11-1/4	-1	9/16	4
	13-28-10	721	10	13-1/2	8	17-1/2	22-13/16	17-9/16	18-7/8	16-1/4	16-1/16	23-1/2	8	15	17	14-1/8	15-1/4	-1-25/32	9/16	4
	13-28-15	1081	15	16	10	17-1/2	23-1/16	17-9/16	18-7/8	16-1/4	15-1/16	23-1/2	10	15	17	14-1/8	15-1/4	-1-1/8	9/16	4
	13-28-20	1442	20	16	10	17-1/2	23-1/16	17-9/16	18-7/8	16-1/4	15-1/16	23-1/2	10	15	22	13-7/8	19-3/4	-2-25/32	11/16	4
	13-28-25	1802	25	16	10	17-1/2	23-1/16	17-9/16	18-7/8	16-1/4	15-1/16	23-1/2	10	15	22	13-7/8	19-3/4	+3-5/16	11/16	4
32 oz. 55.425" of Water	13-32-5	315	5	9	4	18	23-1/16	18-1/16	19-3/8	16-3/4	18-9/16	24	6	15-1/2	13	14-5/8	11-1/4	-7/8	9/16	4
	13-32-7-1/2	473	7-1/2	9	4	18	23-1/16	18-1/16	19-3/8	16-3/4	18-9/16	24	6	15-1/2	13	14-5/8	11-1/4	-1-1/8	9/16	4
	13-32-10	631	10	13-1/2	8	18	23-5/16	18-1/8	19-3/8	16-3/4	16-9/16	24	8	15-1/2	17	14-3/8	15-1/4	-1-51/64	9/16	4
	13-32-15	947	15	13-1/2	8	18	23-5/16	18-1/8	19-3/8	16-3/4	16-9/16	24	8	15-1/2	17	14-3/8	15-1/4	-1-5/8	9/16	4
	13-32-20	1261	20	13-1/8	8	18	23-5/16	18-1/8	19-3/8	16-3/4	16-9/16	24	8	15-1/2	22	14-3/8	19-3/4	+1-7/8	11/16	4
	13-32-25	1577	25	13-1/2	8	18	23-5/16	18-1/8	19-3/8	16-3/4	16-9/16	24	8	15-1/2	22	14-3/8	19-3/4	+2-1/8	11/16	4

* PLUS INDICATES CENTER LINE TO LEFT OF MOUNTING HOLE (AS SHOWN)
MINUS' INDICATES CENTER LINE TO RIGHT OF MOUNTING HOLE.

PRESSURE EQUIVALENTS

Oz. per Sq. In.	Lbs. per Sq. In.	Ft. of Water	In. of Mercury	In. of Water
.25	.015	.036	.031	.43
.50	.031	.077	.063	.86
.75	.046	.108	.095	1.29
1.	.062	.144	.127	1.73
2.	.125	.288	.255	3.46
3.	.187	.433	.382	5.19
4.	.250	.577	.510	6.92
5.	.312	.721	.637	8.66
6.	.375	.866	.765	10.39
7.	.437	1.010	.892	12.12
8.	.500	1.154	1.020	13.85
9.	.562	1.299	1.148	15.58
10	.625	1.443	1.275	17.32
11	.687	1.587	1.403	19.05
12	.750	1.732	1.530	20.78
13	.812	1.876	1.658	22.51
14	.875	2.020	1.785	24.24
15	.937	2.165	1.913	25.98
16	1.000	2.309	2.040	27.71
18	1.125	2.598	2.295	31.17
20	1.250	2.886	2.551	34.64
24	1.500	3.464	3.061	41.56
28	1.750	4.041	3.571	48.49
32	2.000	4.618	4.081	55.42

CORRECTIONS FOR REDUCED AIR DENSITIES

PRESSURE CORRECTION FOR ALTITUDE

The required increase of blower pressure rating above the basic rating is about 1% per 250 ft. of altitude increase above sea level. Hence, for example, for delivery at a pressure of 16 oz. per sq. in. at an elevation of 5000 ft., the blower used must have a basic pressure rating 5000 ÷ 250 = 20% higher than 16 oz. The correction factor, therefore, is 1.21, per table, and the blower to be used must have a basic sea level rating of 1.21 X 16 = 19.36 oz., calling for a "Jan-Air" blower of 20-oz. rating.

PRESSURE CORRECTION FOR TEMPERATURE

Since the pressure of a Turbo Blower varies inversely as the absolute temperature, this simple formula may be used:

$$\% \text{ change} = \frac{460 + \text{temperature of operation}}{460 + 70^\circ \text{ (Standard air)}} \times 100$$

Thus for a delivery pressure of 16 oz., with an inlet temperature of 200° F. there must be used a blower of basic pressure rating.

$$\frac{460 + 200^\circ}{460 + 70^\circ} \times 100 = 125\%.$$

That is 125% higher than 16 oz.

The combined altitude and temperature correction chart below) may be used for convenience in arriving at the combined temperature and altitude correction factor.

When both altitude and temperature are to be considered, the correction factor is the product of the factors for the two conditions considered separately. The table gives these combination factors.

Thus under the foregoing conditions in combination the correction factor would be 1.21 X 1.25 = 1.51 (per table), and the basic pressure rating called for would be 1.51 X 12 = 24.16 oz., for which the proper selection would be a "Jan-Air" blower of 24 oz. basic rating.

Reversing the use of the factor, it may be noted that the 24-oz. blower just selected would actually deliver 24 ÷ 1.51 = 15.8 oz. Also that a 16-oz. blower under the assumed conditions would give only 16 ÷ 1.51 = 10.5 oz.

PRESSURE CORRECTION FACTORS FOR ALTITUDES AND TEMPERATURES

Table Basis (Factor 1.00): Altitude 0; Standard Air at 70° F.

chart below may be used for convenience in arriving at the combined temperature and altitude correction factor

ALTITUDE IN FEET	INLET TEMPERATURE IN DEGREES, FARENHEIT																					
	40	50	60	70	80	100	120	140	160	180	200	250	300	350	400	450	500	550	600	650	200	750
0	.94	.96	.98	1.00	1.02	1.06	1.09	1.13	1.17	1.21	1.25	1.34	1.43	1.53	1.62	1.72	1.81	1.90	2.00	2.10	2.19	2.28
250	.95	.97	.99	1.01	1.03	1.07	1.11	1.14	1.18	1.22	1.26	1.35	1.45	1.54	1.64	1.74	1.83	1.92	2.02	2.12	2.21	2.31
500	.96	.98	1.00	1.02	1.04	1.08	1.12	1.15	1.19	1.23	1.27	1.36	1.46	1.56	1.65	1.75	1.85	1.94	2.04	2.14	2.23	2.33
750	.97	.99	1.01	1.03	1.05	1.09	1.13	1.17	1.20	1.24	1.28	1.38	1.48	1.57	1.67	1.77	1.86	1.96	2.06	2.16	2.25	2.35
1000	.98	1.00	1.02	1.04	1.06	1.10	1.14	1.18	1.22	1.26	1.29	1.39	1.49	1.59	1.69	1.79	1.88	1.98	2.08	2.18	2.27	2.37
1500	1.00	1.02	1.04	1.06	1.08	1.12	1.16	1.20	1.24	1.28	1.32	1.42	1.52	1.62	1.72	1.82	1.92	2.02	2.12	2.22	2.32	2.42
2000	1.02	1.04	1.06	1.08	1.10	1.14	1.18	1.22	1.26	1.30	1.34	1.45	1.55	1.65	1.75	1.86	1.96	2.06	2.16	2.26	2.36	2.47
2500	1.04	1.06	1.08	1.10	1.12	1.16	1.20	1.25	1.29	1.33	1.37	1.47	1.58	1.68	1.79	1.89	1.99	2.10	2.20	2.31	2.41	2.51
3000	1.06	1.08	1.10	1.12	1.14	1.19	1.23	1.27	1.31	1.36	1.40	1.50	1.61	1.72	1.82	1.93	2.03	2.14	2.24	2.35	2.46	2.56
3500	1.08	1.10	1.12	1.14	1.16	1.21	1.25	1.29	1.34	1.38	1.42	1.53	1.64	1.75	1.85	1.96	2.07	2.18	2.29	2.40	2.50	2.61
4000	1.10	1.12	1.14	1.16	1.19	1.23	1.28	1.32	1.36	1.41	1.45	1.56	1.67	1.78	1.89	2.00	2.11	2.22	2.33	2.44	2.55	2.66
4500	1.12	1.14	1.16	1.19	1.21	1.25	1.30	1.34	1.39	1.43	1.48	1.59	1.70	1.81	1.93	2.04	2.15	2.26	2.38	2.49	2.60	2.71
5000	1.14	1.17	1.19	1.21	1.23	1.28	1.32	1.37	1.42	1.46	1.51	1.62	1.74	1.85	1.96	2.08	2.19	2.30	2.42	2.54	2.65	2.76
5500	1.16	1.19	1.21	1.23	1.26	1.30	1.35	1.40	1.44	1.49	1.54	1.65	1.77	1.88	2.00	2.12	2.23	2.35	2.47	2.58	2.70	2.81
6000	1.19	1.21	1.23	1.26	1.28	1.33	1.38	1.42	1.47	1.52	1.57	1.68	1.80	1.92	2.04	2.16	2.28	2.40	2.51	2.63	2.75	2.87
6500	1.21	1.23	1.26	1.28	1.30	1.35	1.40	1.45	1.50	1.55	1.60	1.71	1.84	1.96	2.08	2.20	2.32	2.44	2.56	2.68	2.80	2.92
7000	1.23	1.26	1.28	1.30	1.33	1.38	1.43	1.48	1.53	1.58	1.63	1.74	1.87	2.00	2.12	2.24	2.36	2.49	2.61	2.74	2.86	2.98
7500	1.26	1.28	1.31	1.33	1.36	1.41	1.46	1.51	1.56	1.61	1.66	1.78	1.91	2.04	2.16	2.29	2.41	2.54	2.66	2.79	2.91	3.04
8000	1.28	1.31	1.33	1.36	1.38	1.43	1.48	1.54	1.59	1.64	1.69	1.82	1.94	2.07	2.20	2.33	2.46	2.58	2.71	2.84	2.97	3.10
8500	1.30	1.33	1.35	1.38	1.41	1.46	1.51	1.57	1.62	1.67	1.72	1.85	1.98	2.11	2.25	2.38	2.51	2.63	2.77	2.90	3.03	3.16
9000	1.32	1.35	1.37	1.40	1.43	1.48	1.53	1.59	1.64	1.69	1.74	1.87	2.00	2.14	2.27	2.42	2.54	2.68	2.80	2.93	3.06	3.20
9500	1.34	1.37	1.39	1.43	1.46	1.50	1.55	1.61	1.66	1.73	1.77	1.90	2.05	2.19	2.31	2.47	2.59	2.74	2.85	3.00	3.14	3.25
10000	1.36	1.39	1.42	1.45	1.49	1.52	1.57	1.63	1.68	1.75	1.80	1.93	2.07	2.21	2.35	2.51	2.63	2.77	2.90	3.03	3.18	3.30

FAN LAWS (Q=CFM P=PRESSURE)

1. Variation in Fan Speed:
   Constant Air Density — Constant System
   (a) Q: Varies as fan speed.
   (b) P: Varies as square of fan speed.
   (c) Power: Varies as cube of fan speed.

2. Variation in Fan Size:
   Constant Tip Speed — Constant Air Density
   Constant Fan Proportions — Fixed Point of Rating
   (a) Q: Varies as square of wheel diameter.
   (b) P: Remains constant.
   (c) RPM: Varies inversely as wheel diameter.
   (d) Power: Varies as square of wheel diameter.

3. Variation in Fan Size:
   At Constant RPM — Constant Air Density
   Constant Fan Proportions — Fixed Point of Rating
   (a) Q: Varies as cube of wheel diameter.
   (b) P: Varies as square of wheel diameter.
   (c) Tip Speed: Varies as wheel diameter.
   (d) Power: Varies as fifth power of diameter.

4. Variation in Air Density:
   Constant Volume — Constant System
   Fixed Fan Size — Constant Fan Speed
   (a) Q: Constant
   (b) P: Varies as density.
   (c) Power: Varies as density.

5. Variation in Air Density:
   Constant Pressure — Constant System
   Fixed Fan Size — Variable Fan Speed
   (a) Q: Varies inversely as square root of density.
   (b) P: Constant.
   (c) RPM: Varies inversely as square root of density.
   (d) Power: Varies inversely as square root of density.

6. Variation in Air Density:
   Constant Weight of Air — Constant System
   Fixed Fan Size — Variable Fan Speed
   (a) Q: Varies inversely as density.
   (b) P: Varies inversely as density.
   (c) RPM: Varies inversely as density.
   (d) Power: Varies inversely as square of density.

Janette
TURBO-BLOWERS

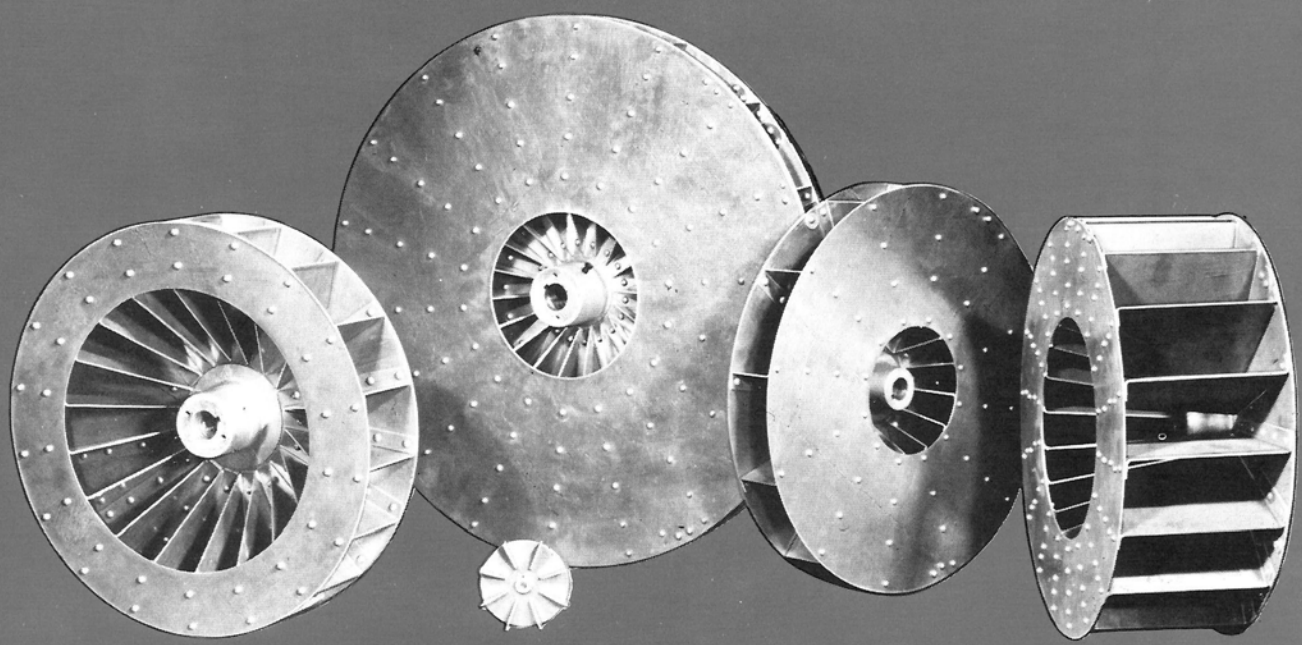

Turto-Pressure Blower Aluminum wheels for industrial and commercial special purpose requirements in movement of air and gases.

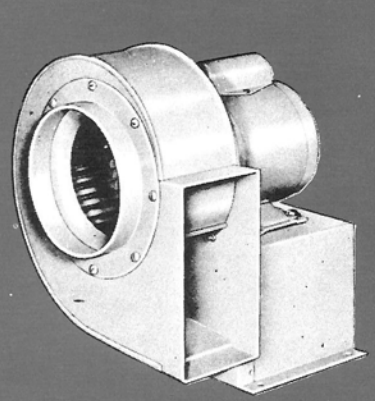

FORWARD CURVE

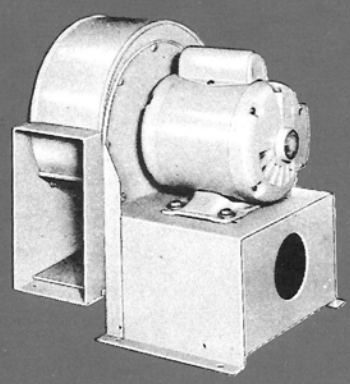

ARRANGEMENT 4 CENTRIFUGAL FAN

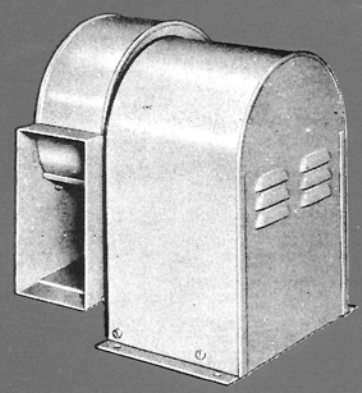

APPROVED
WEATHER PROTECTION

JAN-AIR, inc.

FACTORY AND GENERAL OFFICES
10815 COMMERCIAL STREET / RICHMOND, ILLINOIS 60071
PHONE 815-678-6311

PRINTED IN U.S.A.

Janette BLOWER WHEELS

WITH COMPLETE COMPONENTS

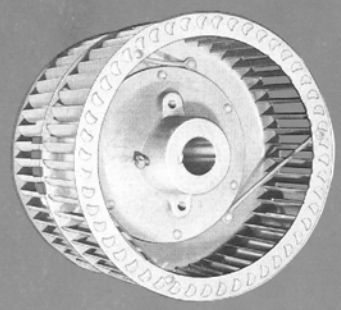

FORWARD CURVE
Standard Duty

RANGE OF SIZES: 5", 5½", 6¼", 7", 7 11/16", 8⅜", 9 3/16", 9 15/16", 10⅝", 12 3/16".
BULLETIN NO. 10

Available in single and double inlets, in steel, stainless steel, and aluminum. Built with one U-shaped blade with thongs spot welded on outlet ring. Designed for high speed operation and heat treat applications. DIMENSIONS: from 1" to 6" width in ½" increments.

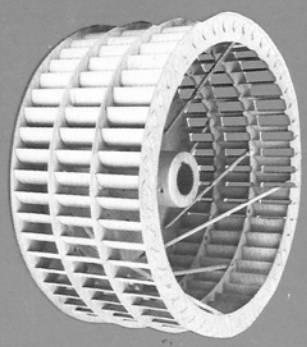

FORWARD CURVE
Heavy Duty

RANGE OF SIZES: 12¼", 13½", 15", and 16½".
BULLETIN NO. 20

Wheels are capable of operating at 3450 RPM when required. Wheels are spot welded construction. Only rivets used secure hub to back plate. In steel, stainless steel and aluminum. DIMENSIONS: From 2" to 9" width in ½" increments.

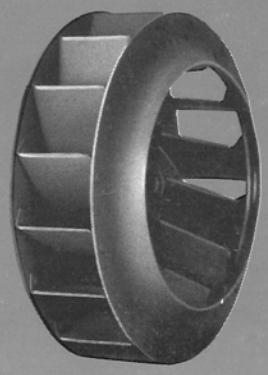

BACKWARD INCLINE
Standard Duty

RANGE OF SIZES: 7 11/16", 8⅜", 9 3/16", 10⅝", 11⅜", 12¼", 13½", 15".
BULLETIN NO. 11

Made of steel, stainless steel and aluminum, these wheels are highly desirable because of their non-overloading feature. As are all of our products, they are available with component parts such as inlet rings, housings and motor mounts.

ACCESSORIES

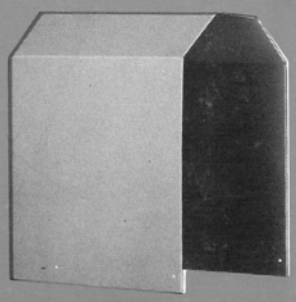

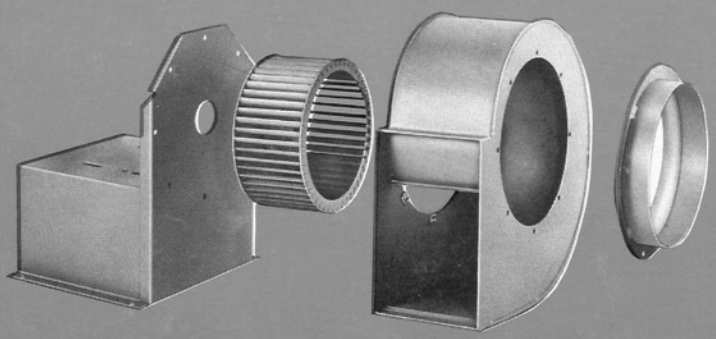

Typical Arrangement 4 components including Weather Cover, Base, Wheel, Housing, and Inlet Cone with Slip Connection.

BLOWER WHEELS

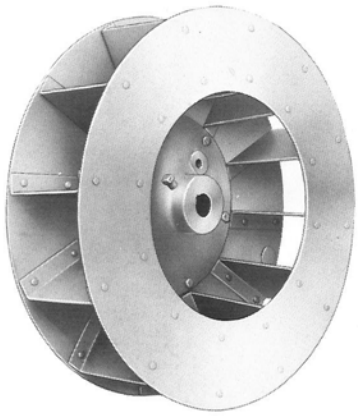

RADIAL BLADED BLOWERS

RANGE OF SIZES: 7 11/16" to 16" in dia., 1 5/8" to 4" wide.
BULLETIN NO. 12

These wheels come as complete units or as parts, either as direct mounts with "C" face flange motors or belt driven. Available in aluminum, steel and stainless steel.

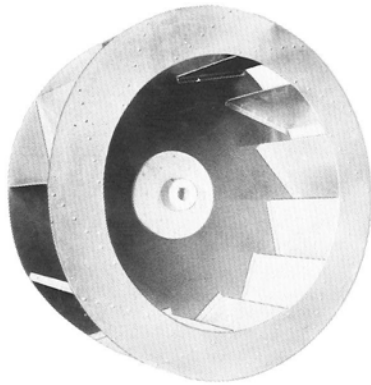

AH DESIGN 26

BULLETIN NO. 26

This wheel is ideally designed for boiler applications where high static heads are required, and is available with a full line of component parts.

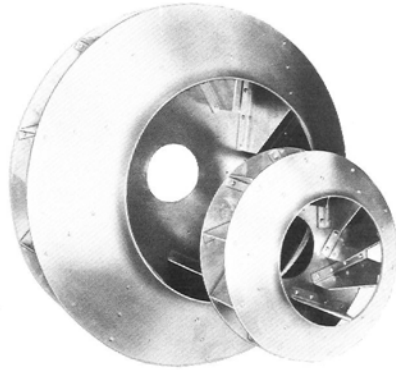

AH DESIGN 16

RANGE OF SIZES: 12¼" to 32".
BULLETIN NO. 16

This air handling wheel has excellent operating qualities relating to motor horsepower, high static pressure, and high quantity of air. All applications are made of aluminum or steel.

ACCESSORIES

Spun type Venturi for Backward and Forward Curve

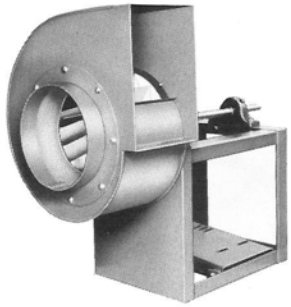

Motor Mounts, Arrangement 10

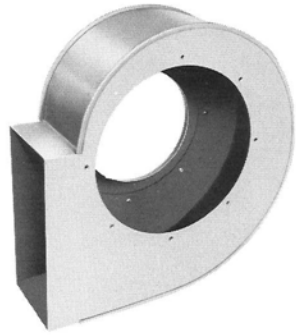

Housing treated for A, B and C explosion requirements.

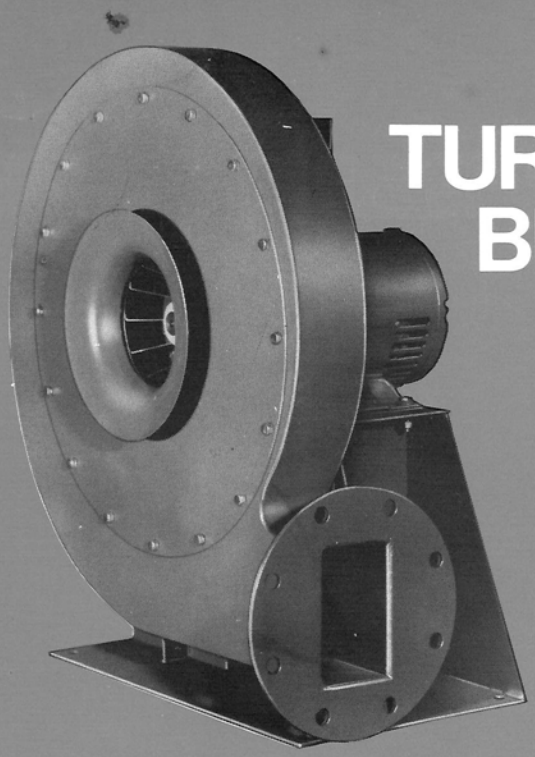

TURBO-BLOWERS

BULLETIN NO. 13

This line of blower equipment is used where high static heads and low volume are required. Available primarily as completed units with motors in arrangement 4 or arrangement 1. Wheels are all aluminum construction. Housings are either slip seam or all welded construction and all available in either Aluminum or Steel.

SPECIAL PURPOSE BLOWERS

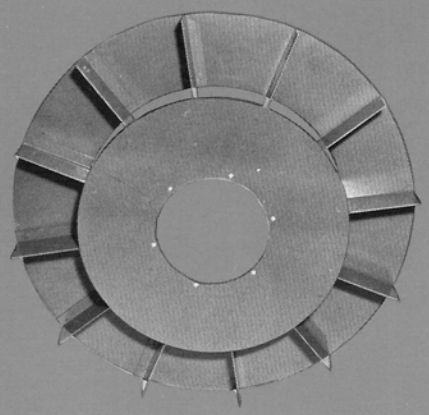

These are made to customers' requirements such as blow through generators, air compressors and oil coolers. Contact factory with your specifications.

ACCESSORIES

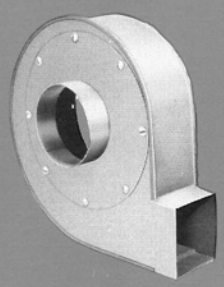

Housing for Radial Bladed Wheels.

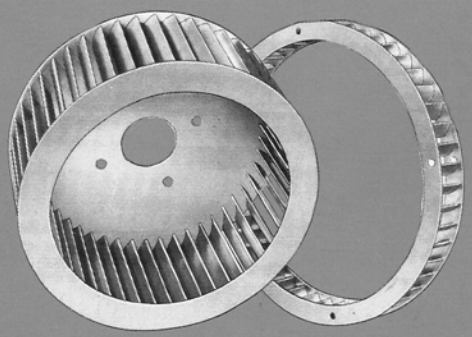

Special Purpose Forward Curve Aluminum Wheels

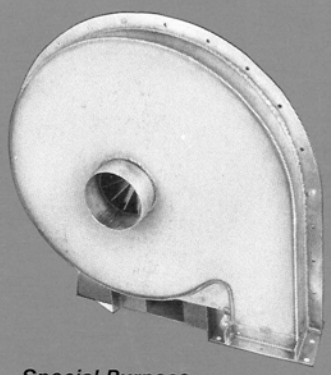

Special Purpose Housings

MODULATING AIR CONTROLS

This is specially designed, particularly for application where modulator motors would actuate the sliding veins of the modulating control. The unit is special purpose with thrust bearing built in, eliminating any rattling or chattering. It is foolproof, and cannot be miscycled.

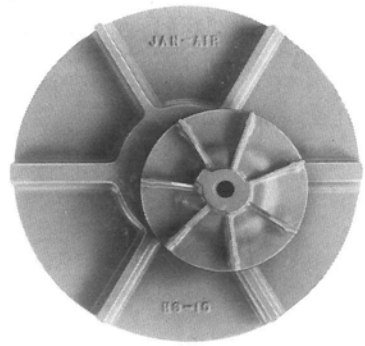

HEAT SLINGERS

Heat slingers are available for applications where additional cooling of bearings, either motor or pillow block, is necessary. Available in sizes 4¾", 7½", and 10" and in bores from ½" to 3⁷⁄₁₆".

JAN-AIR, inc.

FACTORY AND GENERAL OFFICES
10815 COMMERCIAL/RICHMOND, ILLINOIS 60071
PHONE: AREA CODE 815-678-6311

Printed in U.S.A.

Janette COMPONENT PARTS

FOR JAN-AIR BLOWER WHEELS READY TO ASSEMBLE

FORWARD CURVE COMPONENTS

Built of sturdy 16 ga. steel construction, these component parts are available for wheel sizes ranging from 5″ to 16½″ in diameter and widths ranging from 1″ to 6″. All parts are primered and bolt together for easy assembly. The housings can be used for either rotation and assembled in any one of eight positions. The inlet is available with or without slip collar for duct connections. These parts are also available in stainless steel & aluminum.

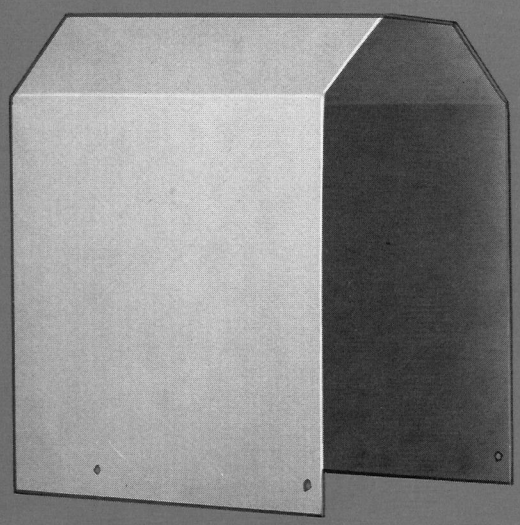

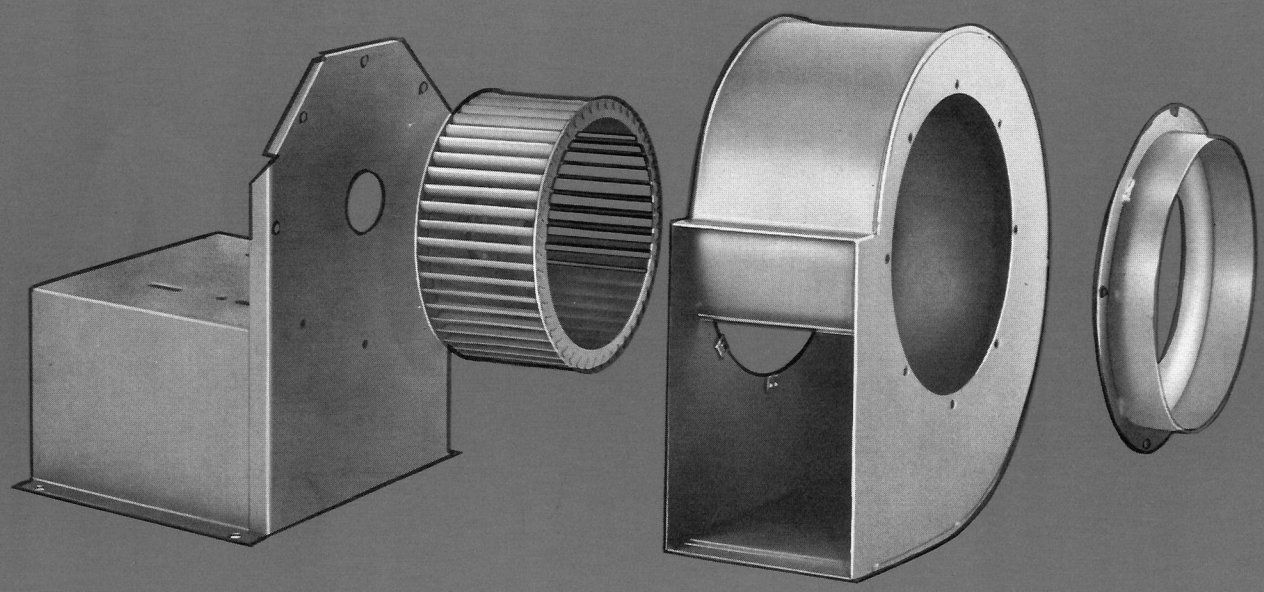

BACKWARD INCLINE COMPONENTS

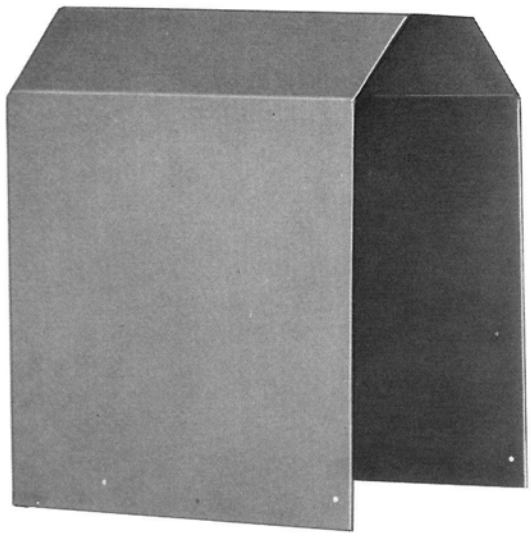

LOUVERED WEATHER COVER FOR AIR CIRCULATION

NON OVERLOADING WHEEL

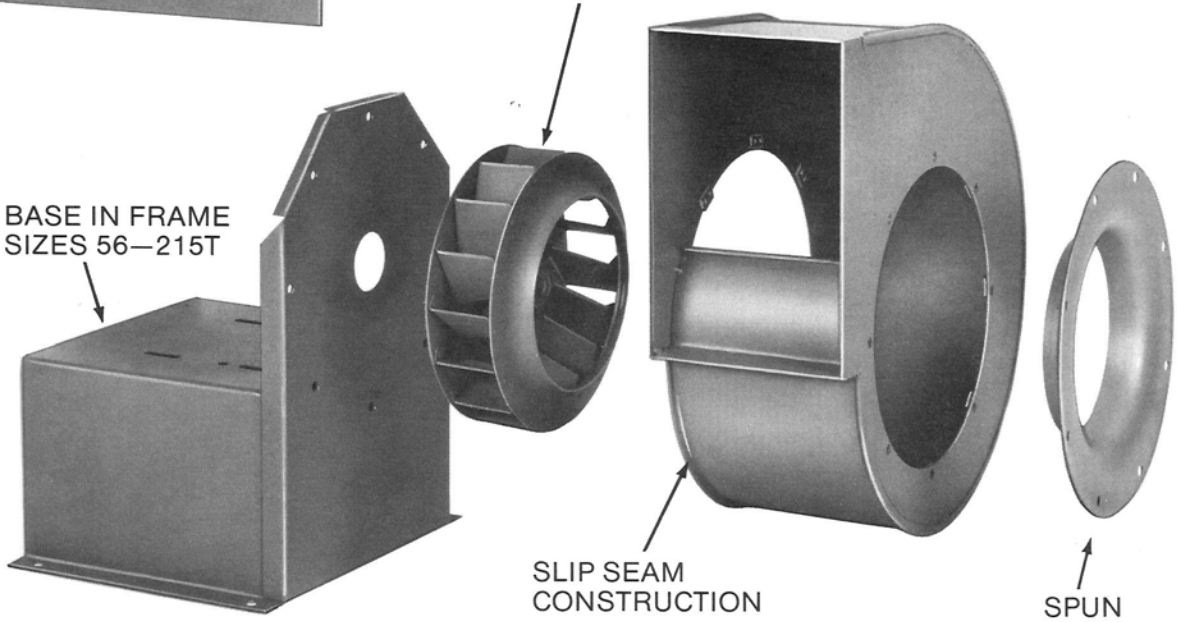

BASE IN FRAME SIZES 56—215T

SLIP SEAM CONSTRUCTION

SPUN INLET

These components are designed for wheels ranging from 7 11/16″ to 15″ diameter and 2¾″ to 5½″ wide. Heavy 16 ga. steel construction is standard, however, they are available in stainless steel and aluminum. The housings are universal so they can be used for either rotation in eight positions. All parts are primered and bolt together for easy assembly.

RADIAL BLADED COMPONENTS

Sizes on our radial blade parts range from 6¼" to 15" in diameter and from 1⅝" to 4" in width. These parts come standard in heavy 16 ga. steel construction, all parts are primered and bolt together for easy assembly. The universal housing design makes it usable for either rotation in any one of eight positions. These parts are also available in stainless steel and aluminum.

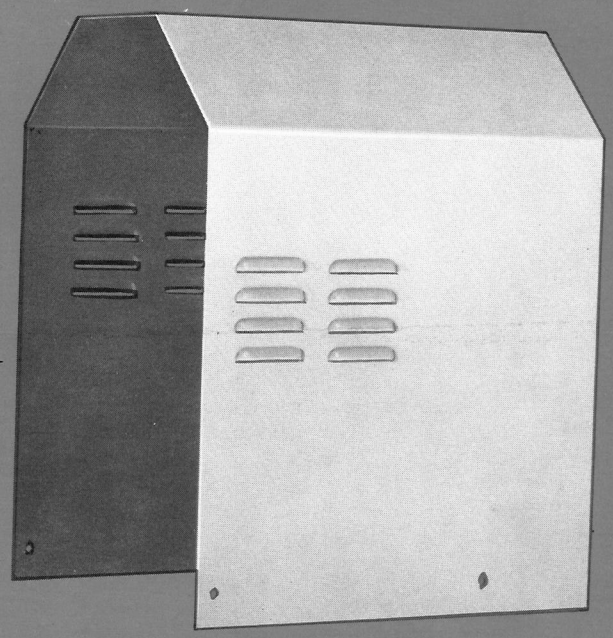

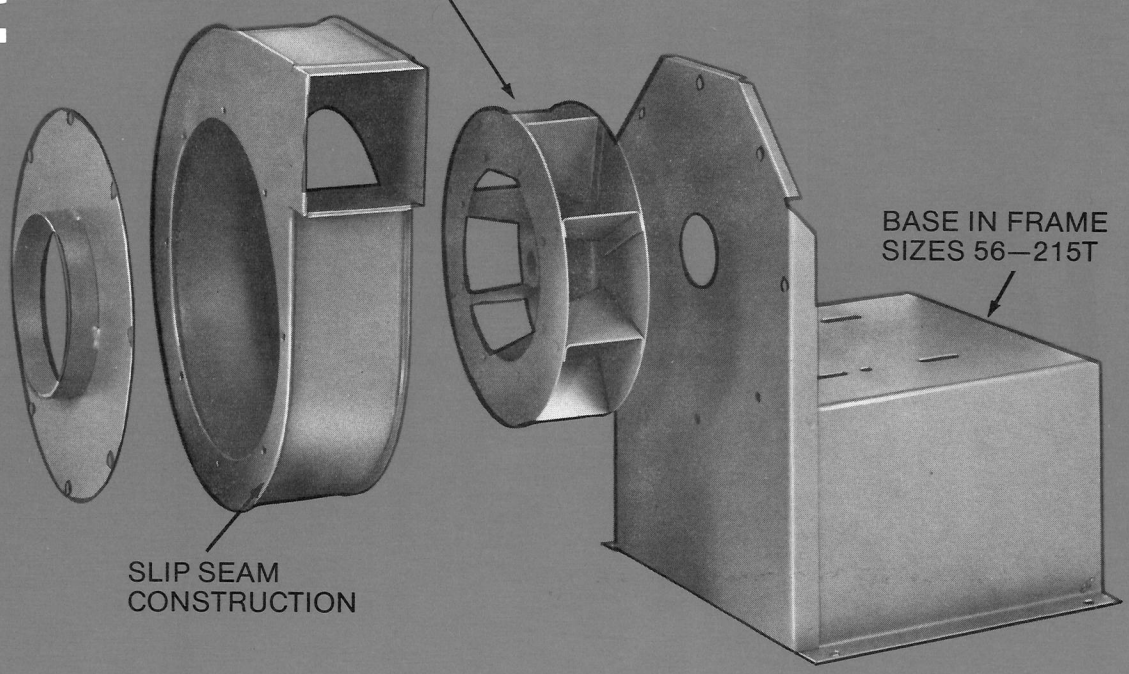

SPECIAL COMPONENT PARTS

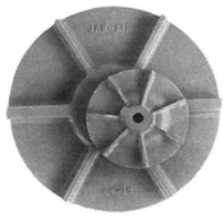

Heat slingers are available for applications where additional cooling of bearings is necessary.

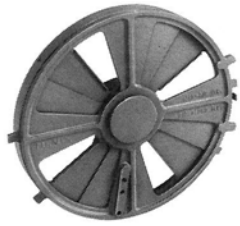

A Modulator for regulating the inlet of a fan is available, which can be controlled either manually or automatically.

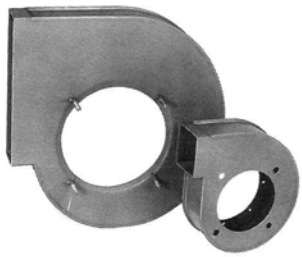

Special housings are available upon request. A housing with studs rather than tapped holes and one with "C" flange motor mount shown.

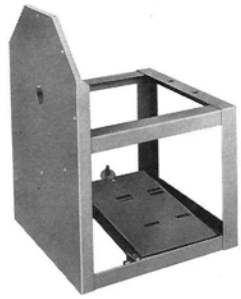

Arrangement 10 bases are available for belt driven applications. Other base arrangements available upon request.

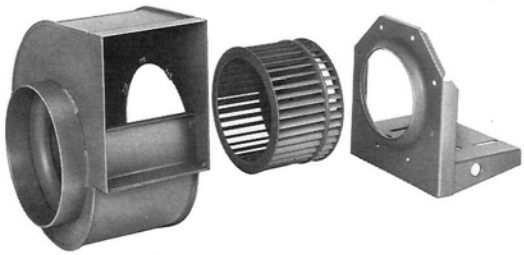

On one type of application we have a base designed for direct drive where the unit is supported by the inlet ring.

This is just a sampling of some component parts we make. If you have any special component part you need, contact us for a quote.

Janette

JAN-AIR, INC.
FACTORY AND GENERAL OFFICES
10815 COMMERCIAL • RICHMOND, ILLINOIS 60071
PHONE: AREA CODE 815-678-6311

Printed in U S A

Janette Blower Wheels

Figure 9

Figure 10

Figure 11

Figure 12

FORWARD CURVE

DESIGN — The design of the "MULTIBLADE" blower wheel as illustrated in figures 9 to 12 was originated by "Janette Engineers" in 1932. We have continued with this particular design up to the present day. It is distinguishable by the fact that one blank makes up two blades. They are inserted in the back plate, such as illustrated on figure 10, and the wheel is then placed in a special anvil in a drop press flattening both of these surfaces. At this point they are put into spot welders that spot weld the blade to the back plate. After this is accomplished, the front ring is put on as illustrated in figure 12. On wheels where high speeds are necessary, the blade tips are spot welded for added strength.

The curvature of the blades is designed to give each size of wheel high operating efficiency, a maximum of air output with a minimum of air noise.

INTERNAL BRACES — On applications where the width of the wheel would be greater than half of the diameter (Example: 9-3/16" x 5" at 1725 RPM and higher speeds) braces are required, particularly where capacitator type motors are used. Because of the rapid acceleration of the motor, it eliminates possibility of work hardening of the blades thus eliminating breakage.

PERIPHERAL RINGS — Peripheral rings are used on high-speed applications where the blade would be wider than the normal width in order to retain the blade in position with shock loads on rapid acceleration. Where the wheel is running at 3450 RPM, and full width or better, it is well to use a peripheral ring; in some cases a set of braces is used mounted to the peripheral ring as well as an additional set on the front ring as illustrated on figures 13 and 14.

SHOCK LOADS — EPOXY — On applications such as diesel engines and what might be considered over-the-road applications, such as refrigerator trucks, a combination of peripheral ring braces is used; in addition, an application of epoxy resin is applied to eliminate period of vibration from originating in the blade. Such applications have been successfully used. We have quite a few years of history on this type of installation. On Epoxy Resin there is a limitation due to temperature. It is well not to use epoxy on applications where you may run over 250° F.

Janette *Blower Wheels*

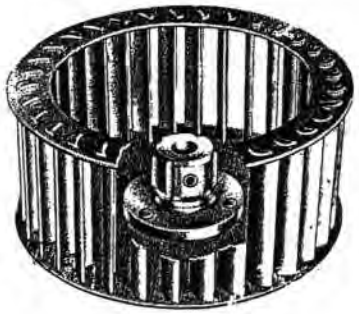

MATERIALS — The wheel is made of mild steel and other alloys.

STAINLESS STEEL — Type 304, 316 and 321 for heat up to 1000° F. or a minus of -100° F., with special preparation to the wheel, non-magnetic type as well as chemical saturated air.

ALUMINUM — Aluminum is a big part of our business. Various methods are employed depending on the installation.

Example: We have wheels 14" x 4" (F.C.) that would start from zero up to full speed (1800 RPM) in four-tenths of a second plus the shock load of gas engine installation - the wheel is mounted directly on the crank shaft. This application is also secured with epoxy resin and operates at temperatures of -70° F.

DIESEL ENGINE APPLICATION — We have supplied customers for many years with standard and special purpose wheels. Possibly, this application is the most severe that we have found for our products.

Figure 13

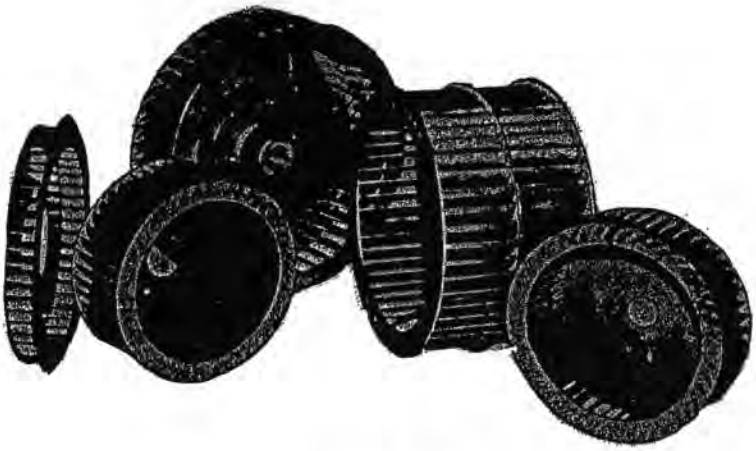

Figure 14

Janette Blower Wheels

Sheet Metal HOUSINGS—SUGGESTED SCROLL DIMENSIONS

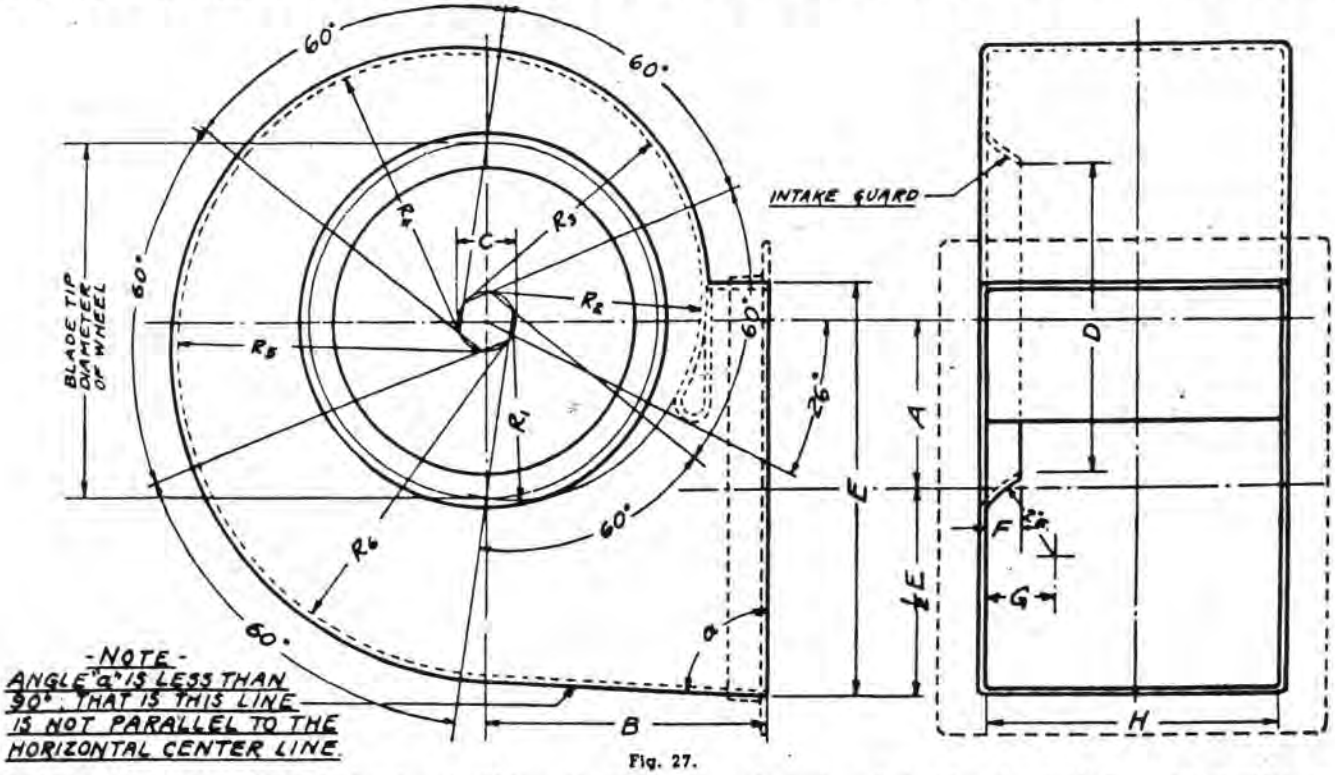

Fig. 27.

NOTE—For double inlet wheels the housing should have identical intakes and guards on both sides. A suitable flange for attaching an outlet pipe or mounting for the housing can be added as shown by the dotted line on the diagram.

FOR SINGLE INLET WHEELS

Wheel Diam.	Blade Tip Diam.	A	B	C	D	E	F	G	H-Dimension 1"	2"	3"	4"	5"	6"	R1	R2	R3	R4	R5	R6
5	4 7/8	2 1/2	4 3/4	7/8	3 13/16	6	3/8	1 17/32	2 1/4	3 1/4	4 1/4	5 1/4	6 1/4	7 1/4	2 5/8	3 1/16	3 1/2	3 15/16	4 3/8	4 13/16
6 1/4	6 1/16	3 1/4	5 1/2	1 1/16	4 7/8	7 1/2	3/8	1 17/32	2 1/4	3 1/4	4 1/4	5 1/4	6 1/4	7 1/4	3 17/64	3 51/64	4 21/64	4 55/64	5 25/64	5 59/64
7	6 25/32	3 1/2	5 3/4	1 3/16	5 5/8	8	3/8	1 17/32	2 1/4	3 1/4	4 1/4	5 1/4	6 1/4	7 1/4	3 31/32	4 1/4	4 27/32	5 7/16	6 1/32	6 5/8
7 11/16	7 17/32	3 5/8	6 1/8	1 7/32	6 5/16	8 1/2	1/2	1 19/32	2 1/2	3 1/2	4 1/2	5 1/2	6 1/2	7 1/2	4 1/64	4 5/8	5 15/64	5 27/32	6 29/64	7 1/16
8 3/8	8 1/4	3 3/4	6 1/2	1 1/4	7 1/16	9	1/2	1 19/32	2 1/2	3 1/2	4 1/2	5 1/2	6 1/2	7 1/2	4 7/32	4 27/32	5 15/32	6 3/32	6 23/32	7 11/32
9 3/16	9 3/64	4 1/4	7	1 1/2	7 7/8	10	1/2	1 19/32	2 1/2	3 1/2	4 1/2	5 1/2	6 1/2	7 1/2	4 55/64	5 39/64	6 23/64	7 1/64	7 55/64	8 39/64
9 15/16	9 13/16	4 3/4	8	1 3/4	8 5/8	11 1/2	3/4	1 11/16	3	4	5	6	7	8	5 9/32	6 5/32	7 1/32	7 29/32	8 25/32	9 21/32
12 3/16	12 1/16	5 3/4	9	2	10 3/4	13 1/2	3/4	1 11/16	3	4	5	6	7	8	6 15/32	7 15/32	8 15/32	9 15/32	10 15/32	11 15/32

FOR DOUBLE INLET WHEELS

Wheel Diam.	Blade Tip Diam.	A	B	C	D	E	F	G	H Dimension 4"	5"	6"	7"	8"	10"	12"	R1	R2	R3	R4	R5	R6
5	4 7/8	2 1/2	4 3/4	7/8	3 13/16	6	3/8	1 17/32	5 1/4	6 1/4	7 1/4	8 1/4	9 1/4	11 1/4	13 1/4	2 5/8	3 1/16	3 1/2	3 15/16	4 3/8	4 13/16
6 1/4	6 1/16	3 1/4	5 1/2	1 1/16	4 7/8	7 1/2	3/8	1 17/32	5 1/4	6 1/4	7 1/4	8 1/4	9 1/4	11 1/4	13 1/4	3 17/64	3 51/64	4 21/64	4 55/64	5 25/64	5 59/64
7	6 25/32	3 1/2	5 3/4	1 1/16	5 5/8	8	3/8	1 17/32	5 1/4	6 1/4	7 1/4	8 1/4	9 1/4	11 1/4	13 1/4	3 31/32	4 1/4	4 27/32	5 7/16	6 1/32	6 5/8
7 11/16	7 17/32	3 5/8	6 1/8	1 7/32	6 5/16	8 1/2	1/2	1 19/32	5 1/2	6 1/2	7 1/2	8 1/2	9 1/2	11 1/2	13 1/2	4 1/64	4 5/8	5 15/64	5 27/32	6 29/64	7 1/16
8 3/8	8 1/4	3 3/4	6 1/2	1 1/4	7 1/16	9	1/2	1 19/32	5 1/2	6 1/2	7 1/2	8 1/2	9 1/2	11 1/2	13 1/2	4 7/32	4 27/32	5 15/32	6 3/32	6 23/32	7 11/32
9 3/16	9 3/64	4 1/4	7	1 1/2	7 7/8	10	1/2	1 19/32	5 1/2	6 1/2	7 1/2	8 1/2	9 1/2	11 1/2	13 1/2	4 55/64	5 39/64	6 23/64	7 1/64	7 55/64	8 39/64
9 15/16	9 13/16	4 3/4	8	1 3/4	8 5/8	11 1/2	3/4	1 11/16	6	7	8	9	10	12	14	5 9/32	6 5/32	7 1/32	7 29/32	8 25/32	9 21/32
12 3/16	12 1/16	5 3/4	9	2	10 3/4	13 1/2	3/4	1 11/16	6	7	8	9	10	12	14	6 15/32	7 15/32	8 15/32	9 15/32	10 15/32	11 15/32

Janette Blower Wheels

DIMENSIONS—DOUBLE INLET WHEELS

Blower Wheel as shown is for counter clockwise rotation (facing hub extension end). Wheels may be supplied for either clockwise or counter clockwise rotation as desired.

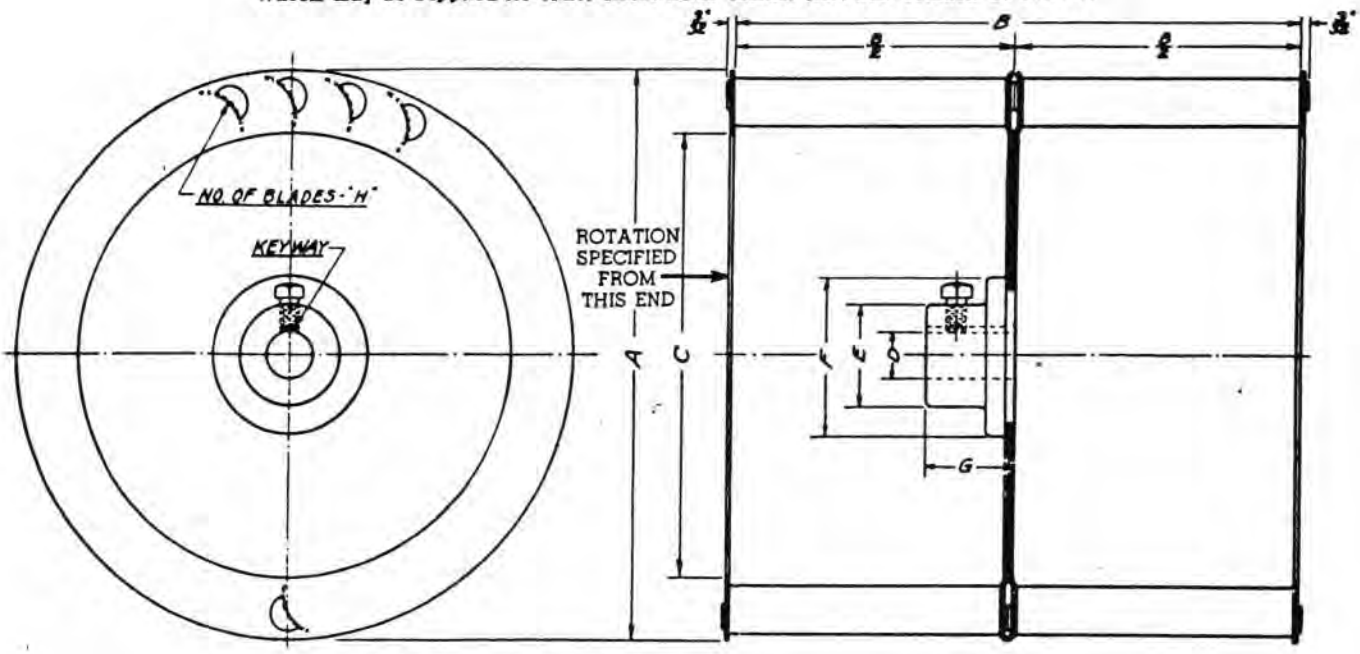

Fig. 29. Complete hub dimensions are given on pages 15 to 18.

WHEEL			HUB								Max. Safe R.P.M. of Wheel With Inside Hub	Approx. Net Weights in Ounces
Maximum Diameter in Inches	★Width of Blades Inside Discs	Diam. of Air Inlet	Number (Size)	★★Max. Diameter of Bore	Diameter	Diameter of Flange	Length in Inches	Number of Blades	Keyway Width	Keyway Depth		
A	B	C		D	E	F	G					
5	4 3/16 5 3/16 6 3/16	3 11/16	1	5/8	1 1/4	2 11/32	1 1/16	26			4000 3500 3000	30 32 35
6 1/4	4 3/16 5 3/16 6 3/16	4 3/4	1 1 1/2 1 1/2	5/8 3/4 3/4	1 1/4 1 5/16 1 5/16	2 11/32	1 1/16 1 9/16 1 9/16	32			2600 2400 2200	42 45 49
7	6 3/16 7 3/16 8 3/16	5 1/2	1 1/2 2 2	3/4	1 5/16 1 1/2 1 1/2	2 11/32 3 3	1 9/16 1 3/4 1 3/4	36	3/16 3/16	3/32 3/32	2230 2130 2000	52 62 65
7 11/16	6 3/16 7 3/16 8 3/16	6 1/4	2	3/4	1 1/2	3	1 3/4	40	3/16 3/16 3/16	3/32 3/32 3/32	2010 1950 1900	65 69 73
8 3/8	6 1/16 7 1/16 8 1/16	7	3	1	1 3/4	6	2 1/2	44	1/4 1/4 1/4	1/8 1/8 1/8	1805 1750 1700	75 92 97
9 3/16	6 1/16 7 1/16 8 1/16	7 11/16	3	1	1 3/4	6	2 1/2	48	1/4 1/4 1/4	1/8 1/8 1/8	1685 1600 1550	99 134 139
9 15/16	8 1/16 10 1/16	8 3/8	3	1	1 3/4	6	2 1/2	52	1/4 1/4	1/8 1/8	1540 1450	150 161
12 3/16	10 1/16 12 1/16	10 5/8	3	1	1 3/4	6	2 1/2	64	1/4 1/4	1/8 1/8	1058 900	191 205

★Dimensions are for the width of blades INSIDE the inlet discs. For overall widths ADD 3/16" to the figures shown in column B.

★★A number 2 hub without keyway, can be furnished with a 1" bore. When a hub is wanted with a bore of over 1" and not more than 1 1/2", a number 4 hub can be furnished for an additional charge.

When wheels are wanted for running at higher speeds than listed, send complete information.

Janette Blower Wheels

When data is wanted on blower wheels driven at speeds not listed in the tabulations, use these formulas:

FAN SPEED—These rules are approximate but are a safe practical guide to follow:

The H.P. varies directly as the CUBE of the fan speed (r.p.m.)
The capacity in C.F.M. varies directly as the fan speed (r.p.m.)
The pressure varies directly as the SQUARE of the fan speed (r.p.m.)

$$\text{HORSE POWER} = H \times \left(\frac{R}{1725}\right)^3$$

$$\text{CAPACITY (in C.F.M.)} = \frac{C \times R}{1725}$$

$$\text{STATIC PRESSURE (in inches of water column)} = P \times \left(\frac{R}{1725}\right)^2$$

C=Free air delivery capacity given in tabulation for wheel wanted at a speed of 1725 r.p.m.
R=R.P.M. wheel is to be run.
P=Static pressure shown in tabulation for wheel wanted (1725 r.p.m.) and delivering the C.F.M. desired.
H=H.P. shown in the tabulation as necessary to drive the wheel wanted at 1725 r.p.m.

To obtain the C.F.M. of a double inlet wheel when data for single wheels only is available, multiply the C.F.M. listed for a single inlet wheel of the same diameter and one half the width, by 1.9; the H.P. to drive by 2.

C.F.M.—The amount (volume) of air used or required is figured in cubic feet per minute.

VELOCITY is the travel expressed in feet per minute. (F.P.M.)

TIP SPEED of a wheel is obtained by multiplying the circumference (diameter x 3.1416) in feet by the r.p.m.

BRAKE H.P. is the ACTUAL horsepower required to drive a wheel. The H.P. of the motor should EXCEED the B.H.P. in order to take care of transmission loss.

STATIC PRESSURE is the resistance or pressure created by the friction of air passing thru pipes, pipe turns, ducts, dampers, registers or obstructions which the blower wheel must overcome in moving air. It is measured in terms of water gauge.

HEAD—The head developed by a blower wheel is composed of a STATIC and VELOCITY head. The static head is the pressure exerted in all directions against the housing and ducts at the discharge and can be measured by a draft gauge held radially in the air discharge duct. The wheel must also produce sufficient head to impart the necessary velocity to the air, or velocity head. This head is represented by the difference between static pressure and the pressure shown by a gauge connected to a pipe in the duct system in an axial direction to the air flow. The total head is the sum of the static and velocity heads. If the discharge is wide open, the static head is 0. If the discharge is closed, the velocity head is 0 and the static head equals the total head.

The pressure developed by a wheel moving gas or hot air will be greater, or less, than that developed when moving normal air, in degree depending upon the density of the gas or hot air. If a motor is selected for driving a wheel intended to move hot air and cold air is moved under the same discharge restrictions and wheel speed, the motor will be overloaded because of the greater air density and higher pressure developed by the wheel.

The starting torque required by a blower wheel is ordinarily low, as the air delivery is practically zero. When started with a closed discharge, the maximum air load taken in churning at the shutoff point is about 25% of rated load.

MOTORS—As any type of blower may overload its driving motor IF the wheel speed is increased over the normal speed for which the motor was selected, overload protection should be provided. Undervoltage release may also be desirable to ensure starting and continuity of operation.

As the starting and running torques of an A.C. motor are reduced as the square of the voltage at the terminals (the speed varying directly with the frequency) it is important to have wiring of sufficient size to minimize voltage drop. A motor that takes a high starting current causes a proportionately high voltage drop in the line. For example, a ¼ H.P. motor would have only 72% of its rated torque with a 15% voltage drop at starting.

DIMENSIONS—SINGLE INLET WHEELS

Blower Wheel as shown is for clockwise rotation (looking at drive side or back plate). Wheels may be supplied for either clockwise or counter clockwise rotation as desired.

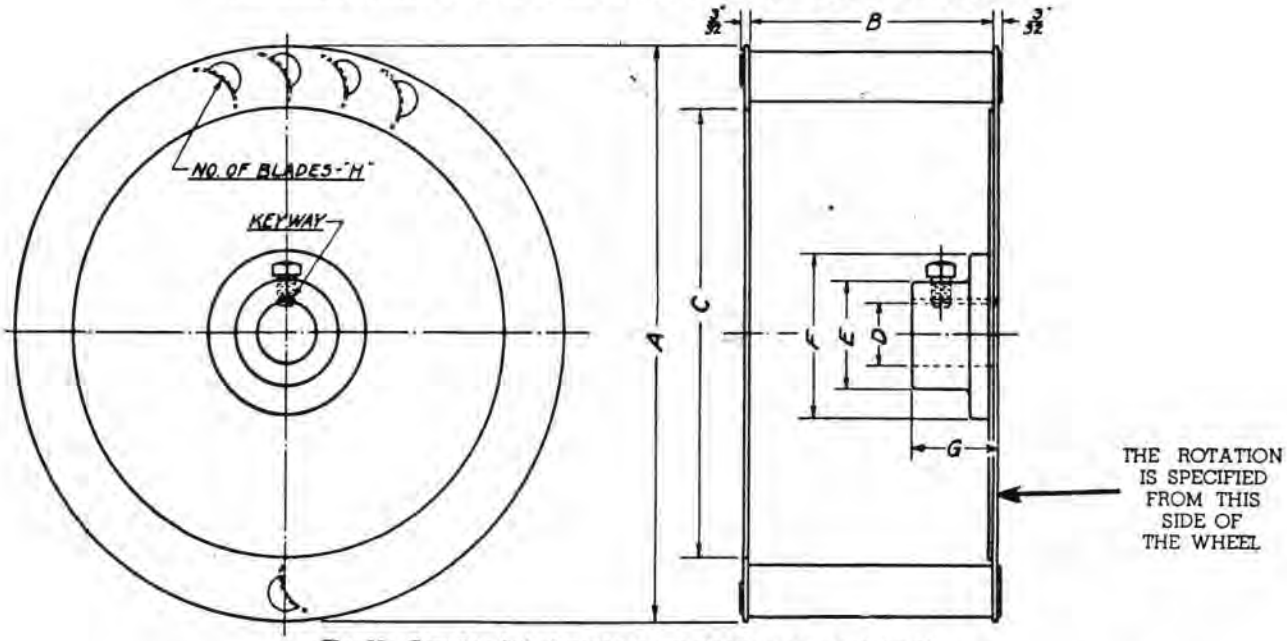

Fig. 28. Complete hub dimensions are given on pages 15 to 18.

Janette Blower Wheels

DIMENSIONS—SINGLE INLET WHEELS

WHEEL			HUB									Maximum Safe R.P.M. of Wheel With Inside Hub	Approx. Net Weights in Ounces
Max. Diameter in Inches	★Width of Blades Inside Discs	Diam. of Air Inlet	Number (Size)	★★Max. Diameter of Bore	Diameter	Diameter of Flange	Length in Inches	Number of Blades	Number of Braces	Keyway Width	Keyway Depth		
A	B	C		D	E	F	G						
5	1	3 11/16	1	5/8	1 1/4	2 11/32	1	26				8500	14
	1 1/2											7000	15
	2											6000	17
	2 1/2											5500	18
	3											5000	19
	3 1/2											4700	21
6 1/4	1	4 3/4	1	5/8	1 1/4	2 11/32	1	32				7000	20
	1 1/2											5700	22
	2											4900	23
	2 1/2											4400	25
	3											4000	26
	3 1/2											3700	28
	4											3500	30
7	1	5 1/2	1	5/8	1 1/4	2 11/32	1	36				6200	23
	1 1/2		1	5/8	1 1/4		1					5100	24
	2		1	5/8	1 1/4		1					4400	26
	2 1/2		1	5/8	1 1/4		1					4000	28
	3		1	5/8	1 1/4		1					3600	30
	3 1/2		1 1/2	3/4	1 5/16		1 9/16					3300	39
	4		1 1/2	3/4	1 5/16		1 9/16					3100	41
7 11/16	1	6 1/4	1	5/8	1 1/4	2 11/32	1	40				5600	26
	1 1/2		1	5/8	1 1/4		1					4500	28
	2		1	5/8	1 1/4		1					3900	30
	2 1/2		1 1/2	3/4	1 5/16		1 9/16					3600	41
	3		1 1/2	3/4	1 5/16		1 9/16					3250	43
	3 1/2		1 1/2	3/4	1 5/16		1 9/16					3000	45
	4		1 1/2	3/4	1 5/16		1 9/16					2800	47
8 3/8	1	7	1	5/8	1 1/4	2 11/32	1	44				5100	30
	1 1/2		1 1/2	3/4	1 5/16	2 11/32	1 1/2					4200	33
	2		1 1/2	3/4	1 5/16	2 11/32	1 1/2					3600	35
	2 1/2		1 1/2	3/4	1 5/16	2 11/32	1 1/2					3250	49
	3		1 1/2	3/4	1 5/16	2 11/32	1 1/2					3000	51
	3 1/2		2	3/4	1 1/2	3	1 3/4			3/16	3/32	2700	66
	4		2	3/4	1 1/2	3	1 3/4			3/16	3/32	2500	68
	4 1/2		2	3/4	1 1/2	3	1 3/4		3	3/16	3/32	2400	70
	5		2	3/4	1 1/2	3	1 3/4		3	3/16	3/32	2300	78
9 3/16	1	7 11/16	1 1/2	3/4	1 5/16	2 11/32	1 1/2	48				4650	36
	1 1/2		1 1/2	3/4	1 5/16	2 11/32	1 1/2					3800	38
	2		1 1/2	3/4	1 5/16	2 11/32	1 1/2					3300	40
	2 1/2		2	3/4	1 1/2	3	1 3/4			3/16	3/32	2950	69
	3		2	3/4	1 1/2	3	1 3/4			3/16	3/32	2700	72
	3 1/2		2	3/4	1 1/2	3	1 3/4			3/16	3/32	2500	74
	4		2	3/4	1 1/2	3	1 3/4			3/16	3/32	2350	77
	4 1/2		3	1	1 3/4	6	2 1/2		3	1/4	1/8	2200	105
	5		3	1	1 3/4	6	2 1/2		3	1/4	1/8	2100	115
9 15/16	1	8 3/8	2	3/4	1 1/2	3	1 3/4	52		3/16	3/32	4300	53
	1 1/2		2	3/4	1 1/2	3	1 3/4			3/16	3/32	3500	55
	2		2	3/4	1 1/2	3	1 3/4			3/16	3/32	3050	59
	2 1/2		2	3/4	1 1/2	3	1 3/4			3/16	3/32	2700	76
	3		2	3/4	1 1/2	3	1 3/4			3/16	3/32	2500	79
	3 1/2		3	1	1 3/4	6	2 1/2		3	1/4	1/8	2300	105
	4		3	1	1 3/4	6	2 1/2		3	1/4	1/8	2150	110
	4 1/2		3	1	1 3/4	6	2 1/2		3	1/4	1/8	2050	116
	5		3	1	1 3/4	6	2 1/2		3	1/4	1/8	1950	123
12 3/16	1	10 5/8	2	3/4	1 1/2	3	1 3/4	64		3/16	3/32	3500	65
	1 1/2		2	3/4	1 1/2	3	1 3/4			3/16	3/32	2900	68
	2		2	3/4	1 1/2	3	1 3/4			3/16	3/32	2500	95
	2 1/2		3	1	1 3/4	6	2 1/2			1/4	1/8	2250	124
	3		3	1	1 3/4	6	2 1/2			1/4	1/8	2000	127
	3 1/2		3	1	1 3/4	6	2 1/2		4	1/4	1/8	1875	131
	4		3	1	1 3/4	6	2 1/2		4	1/4	1/8	1750	137
	4 1/2		3	1	1 3/4	6	2 1/2		4	1/4	1/8	1600	140
	5		3	1	1 3/4	6	2 1/2		4	1/4	1/8	1550	144
	6		3	1	1 3/4	6	2 1/2		4	1/4	1/8	1400	151

★ Dimensions are for the widths of blades INSIDE the backplate and inlet discs. For overall widths ADD 3/16".

★★ When a bore with a diameter of over 1" and not larger than 1 1/2" is wanted, a No. 4 hub can be furnished at an additional charge. A number 2 hub, without keyway, can be furnished with a 1" bore.

When wheels are wanted for operating at higher speeds than listed, send complete information.

JAN AIR, Inc.
RICHMOND, ILLINOIS

Janette Blower Wheels

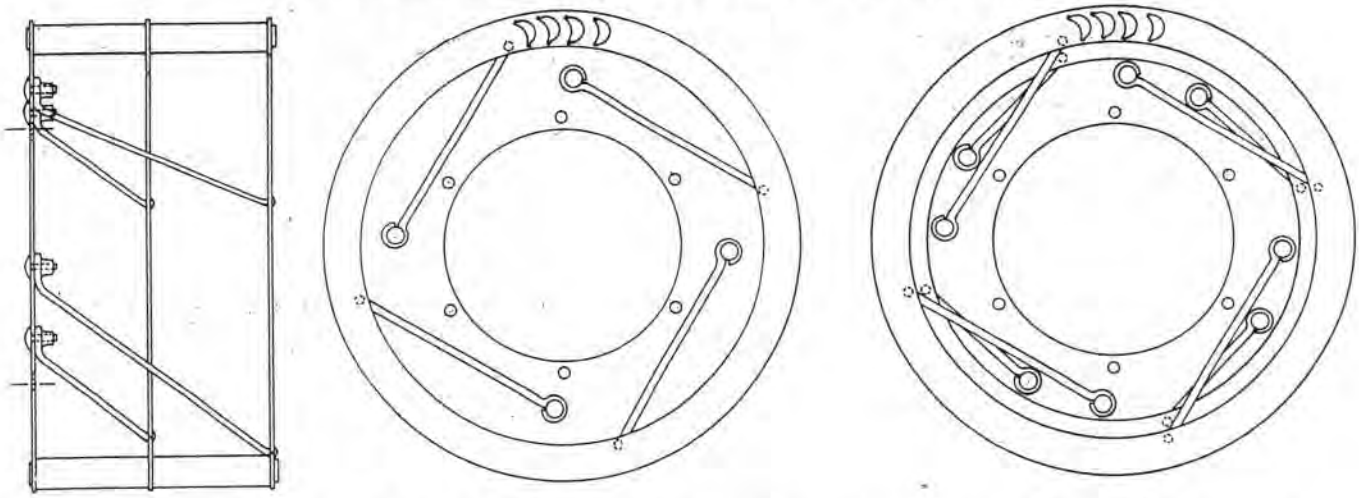

#1 The positioning of the peripheral ring and the outer front ring in respect to internal bracing: for high speed and shock loads the fillet of epoxy resin is placed between the blade and back disc as well as peripheral ring and front ring.

#2 A single set of internal braces for rapid acceleration application

#3 The positioning of the internal braces with peripheral ring - 3450 RPM or better - where the width is greater than 50% of the diameter.

HUB POSITIONS

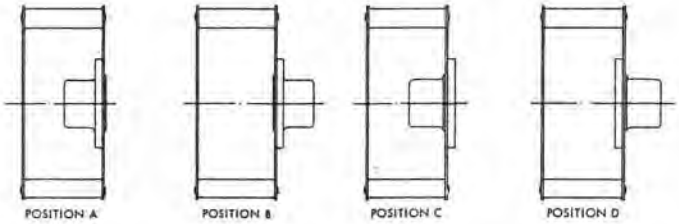

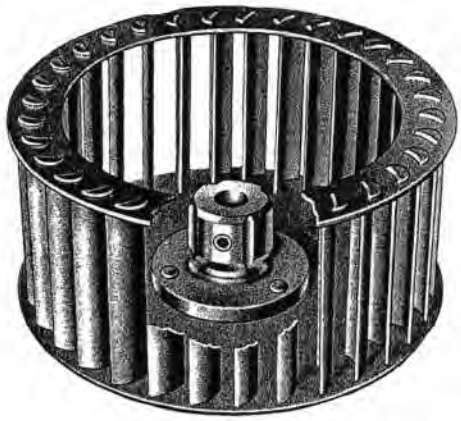

ROTATIONS:

Single inlet wheels are determined from the closed side as illustrated above.
Double width double inlet wheels are determined from the hub end.

A combination Guardian coupling and hub mounted on an oil burner fan: note the wide flange on the hub and solid iron or aluminum rivets as the case might require.

SPEED CHANGE CONVERSION FACTOR

A1 EXAMPLE:

9-3/16" x 5" at 3450 RPM to 1725 RPM = 4200 CFM at 2" SP
4200 x .05 = 2100 CFM
2500 x 2 = 1/2" SP

From 1725 RPM to 3450 RPM
2100 CFM (back to 3450 RPM) x 2 = 4200 CFM
4.000 x .5 = 2" SP

TO 1725 FROM

RPM	CFM	SP	HP
4500	.3833	.1469	.0563
4000	.4312	.1859	.0817
3450	.5000	.2500	.1250
2850	.6052	.3662	.2216
2400	.7187	.5165	.3712
2000	.8625	.7439	.6416
1500	1.150	1.3225	1.5208
1425	1.2105	1.4653	1.7737
1140	1.5131	2.289	3.4641
1000	1.725	2.975	5.1329
850	2.0294	4.118	8.3578

FROM 1725 TO

RPM	CFM	SP	HP
4500	2.608	6.804	17.746
4000	2.3188	5.376	12.467
3450	2.000	4.000	8.000
2850	1.652	2.729	4.509
2400	1.391	1.935	2.692
2000	1.159	1.344	1.558
1500	.8695	.7561	.6575
1425	.826	.6822	.5635
1140	.6608	.4367	.2886
1000	.5797	.3360	.1948
850	.4927	.2428	.1196

A4
To determine a 50 cycle rating from any curve from a 60 cycle graf the CFM is 83% of the rated curve. SP is 69% of the 60 cycle value.

STANDARD FORWARD CURVE INLET CONES

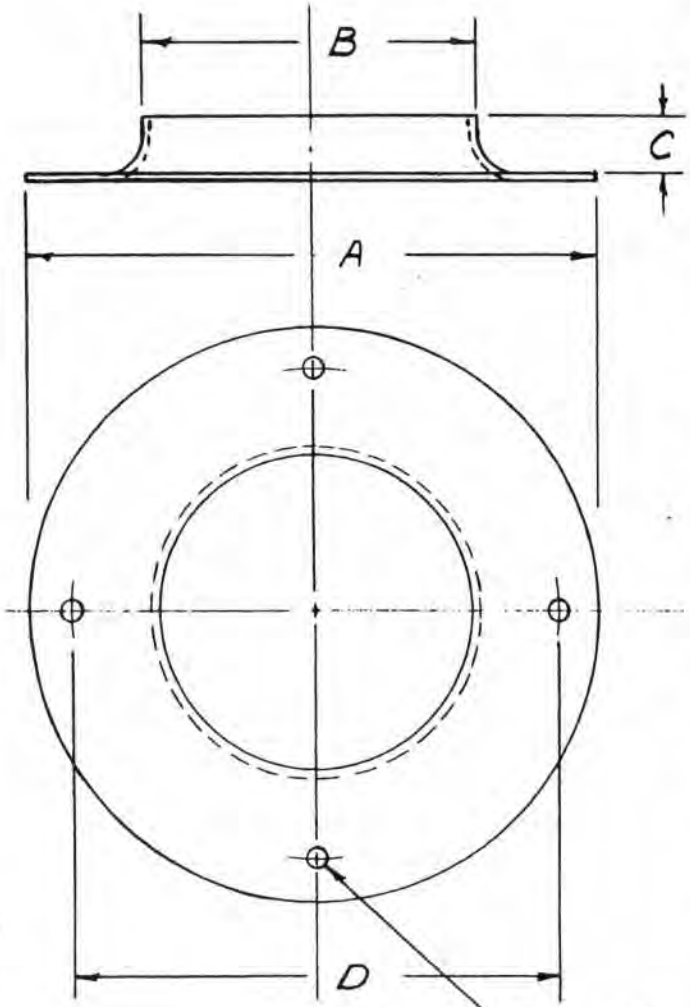

5/16" DIA. "E" NO. HOLES
EQUALLY SPACED ON "D" D.B.C.

INLET CONE PART NO.	WHEEL SIZE	A	B	C	D	E
10-12-500-1	5	6 1/4	3 7/8	7/16	5 13/16	4
10-12-550-1	5 1/2	7	4 1/16	7/16	6 1/8	4
10-12-625-1	6 1/4	7 11/16	4 3/4	11/16	7 1/16	4
10-12-700-2	7	8 3/8	5 5/16	5/8	7 13/16	4
10-12-768-1	7 11/16	9 3/16	5 13/16	13/16	8 5/8	4
10-12-837-1	8 3/8	9 15/16	6 3/4	1 1/16	9 5/16	4
10-12-918-1	9 3/16	10 5/8	7 3/8	7/8	10	4
10-12-993-1	9 15/16	12 3/16	7 13/16	13/16	11	4
10-12-1062-1	10 5/8	12 3/16	8 5/8	1 1/8	11 3/8	8
10-12-1218-1	12 3/16	15	10 1/2	1 3/16	13 1/8	8
10-12-1350-1	13 1/2	16 1/2	11 1/4	1 1/16	14 3/4	8
10-12-1500-1	15	18	12 3/4	1 1/16	16 1/2	8

JAN-AIR, INC.
RICHMOND, ILLINOIS

DRAWN CURT DATE 11/19/64
SCALE NONE MAT. STEEL
DWG. NO. 10-12-100-2

Form 17

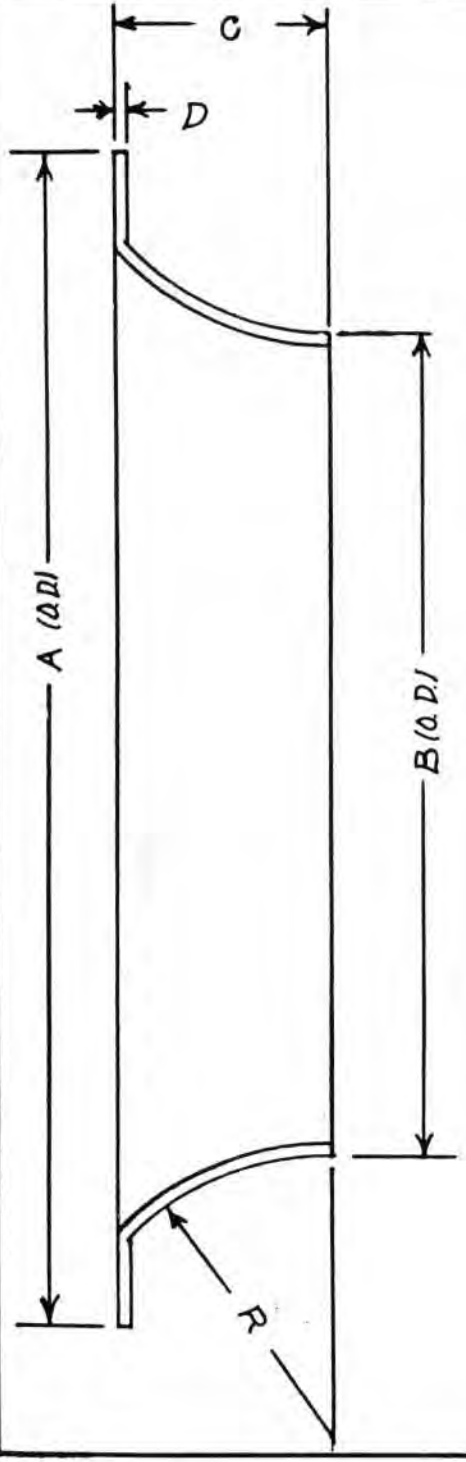

PART NO.	WHEEL SIZE	A	B	C	D	R
11-12-768-1	7 11/16	9 1/16	5 5/16	2 1/4	16 GA ST'L .064 ALUM	2 9/16
11-12-837-1	8 3/8	10 1/16	5 5/16	2 5/16	16 GA ST'L .064 ALUM	2 1/4
11-12-918-1	9 3/16 - 1	10 3/4	6 1/8	2 3/8	16 GA ST'L .064 ALUM	2 1/2
11-12-993-1	9 15/16	12 1/4	6 1/2	2 1/2	16 GA ST'L .064 ALUM	2 5/8
11-12-1062-1	10 5/8	12 1/2	7 1/8	2 1/2	16 GA ST'L .064 ALUM	2 9/16
11-12-1225-1	12 1/4	14	8 1/2	3 3/4	16 GA ST'L .064 ALUM	4 1/2
11-12-1350-1	13 1/2	15	9	4	16 GA ST'L .064 ALUM	4 9/16
11-12-1500-1	15	16 1/2	10	4 1/2	16 GA ST'L .064 ALUM	5 5/16
11-12-918-2	9 9/16 -2	10 3/4	6 1/8	1 3/8	16 GA ST'L .064 ALUM	1 5/16

DIMENSIONS FOR AIR INLETS OF BC. WHEELS

JAN-AIR, INC.
RICHMOND, ILLINOIS

DRAWN KJB DATE 4-7-61
SCALE NTS MAT. AS SPEC.
DWG. NO. C1-H-100-1

Janette Blower Wheels

DIMENSIONS OF HUBS

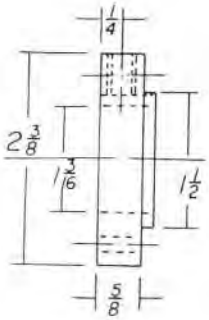

NO. 1-062
MATL ALUM., STEEL & ALL TYPES OF STAINLESS

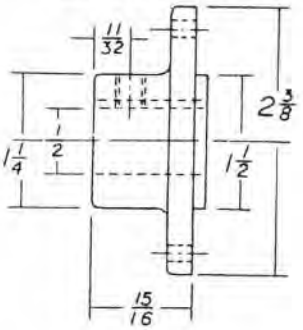

NO. 1-093
MATL. ALUM. & CAST IRON
(FORMALLY CALLED NO. 1)

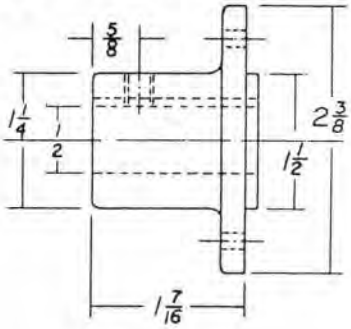

NO. 1-143
MATL. ALUM. & CAST IRON
(FORMALLY CALLED NO. 1½)

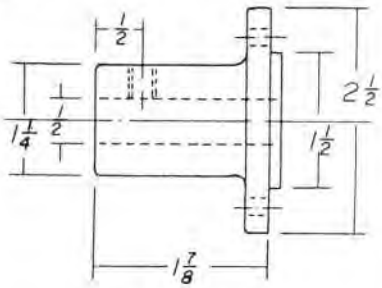

NO. 1-187
MATL. ALUM.
(FORMALLY CALLED NO. 599)

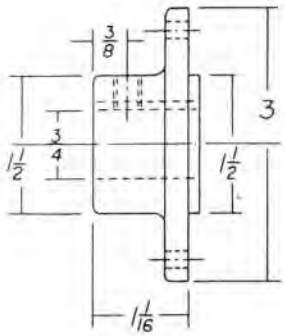

NO. 2-106
MATL ALUM. & CAST IRON
(FORMALLY CALLED NO. 2S)

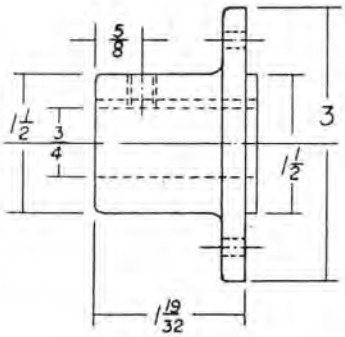

NO. 2-159
MATL. ALUM. & CAST IRON
(FORMALLY CALLED NO. 2)

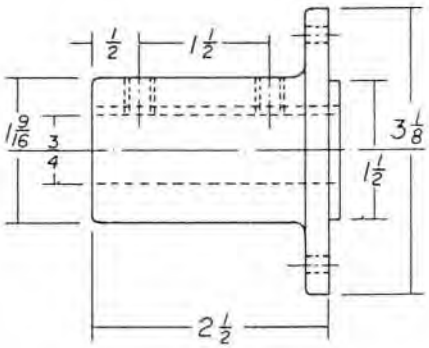

NO. 2-250
MATL. ALUM. & CAST IRON
(FORMALLY CALLED NO. 2-262)

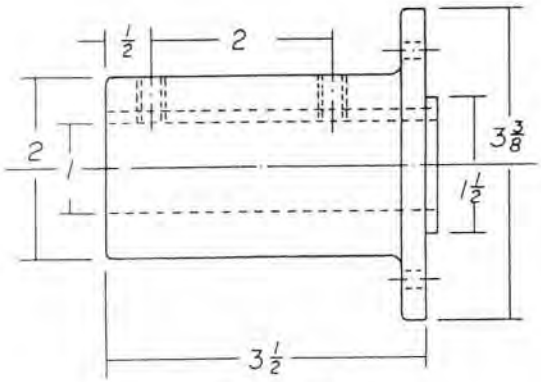

NO. 2-350
MATL. CAST IRON
(FORMALLY CALLED NO. 2-1-362)

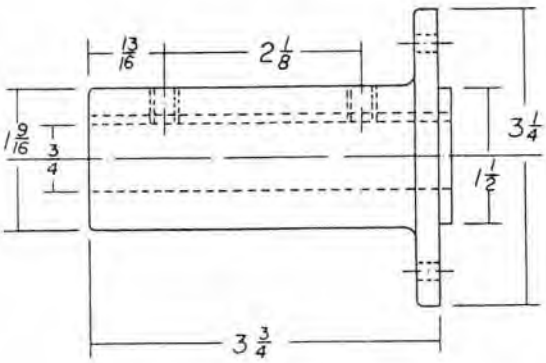

NO. 2-375
MATL. ALUM. & CAST IRON

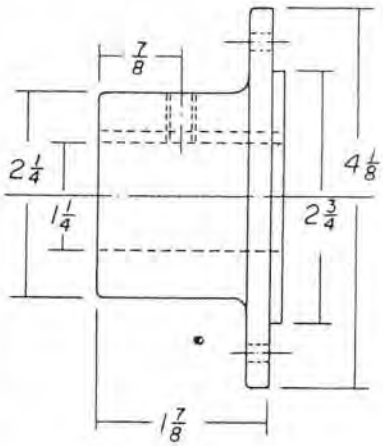

NO. 6-187
MATL ALUM.
(FORMALLY CALLED NO. 6)

HUBS CAN BE HAD IN CAST IRON OR ALUMINUM
MATERIAL SPECIFIED UNDER EACH HUB IS IN PRESENT INVENTORY

Janette Blower Wheels

DIMENSIONS OF HUBS

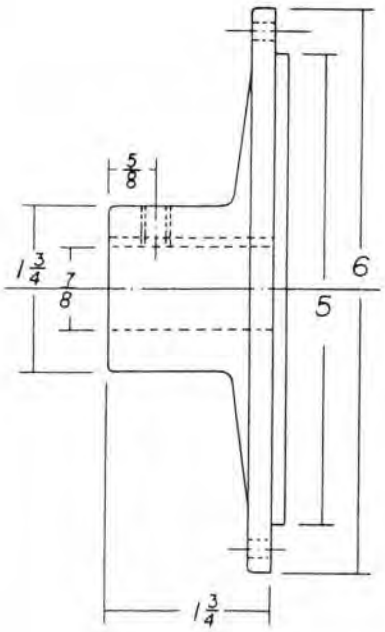

NO. 3-175
MATL. ALUM. & CAST IRON
(FORMALLY CALLED NO. 3S)

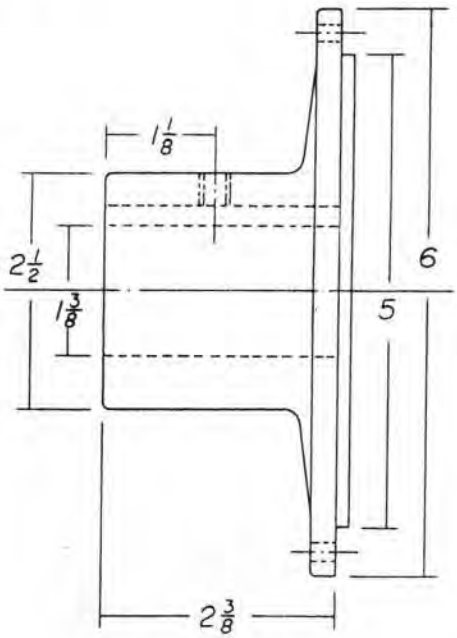

NO. 3-237
MATL. ALUM. & CAST IRON
(FORMALLY CALLED NO. 4)

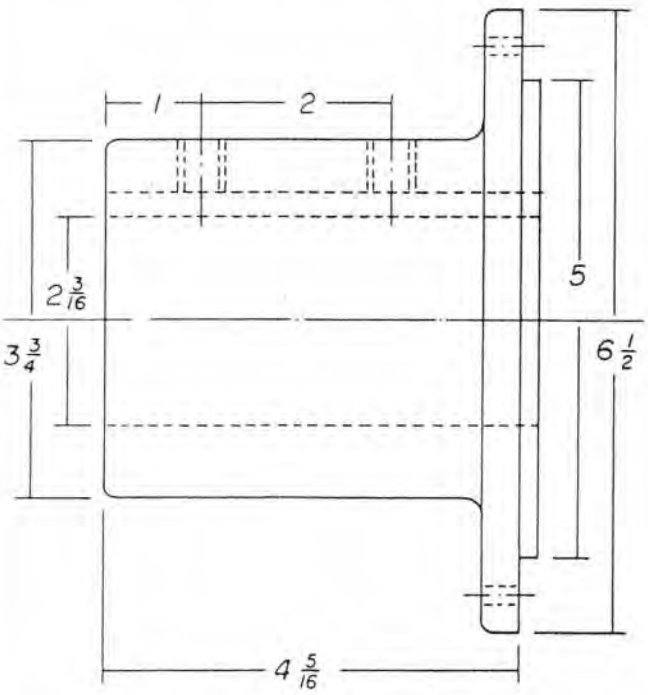

NO. 3-431
MATL. CAST IRON
(FORMALLY CALLED NO. 3000)

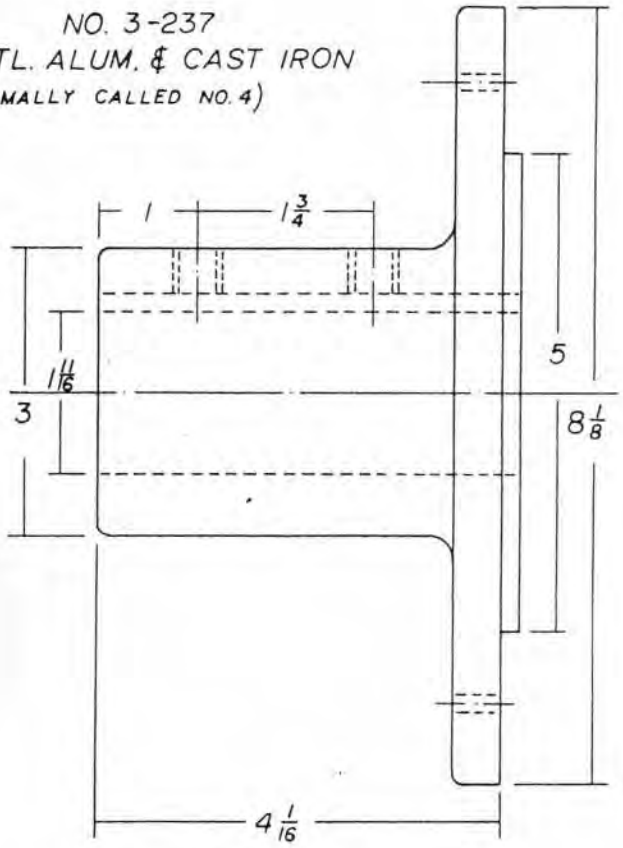

NO. 3-406
MATL. ALUM.
(FORMALLY CALLED NO. 3400)

HUBS CAN BE HAD IN CAST IRON OR ALUMINUM
MATERIAL SPECIFIED UNDER EACH HUB IS IN PRESENT INVENTORY

Janette Blower Wheels

DIMENSIONS OF HUBS

FOUR SPLINE HUBS FOR GUARDIAN COUPLINGS

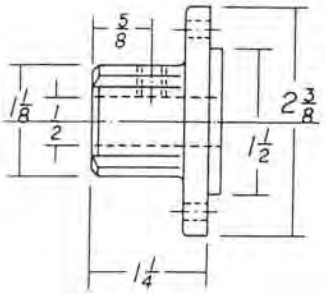

NO. 1-125-4S
MATL. ALUM.
(FORMALLY CALLED NO. 1-4 SPLINE)

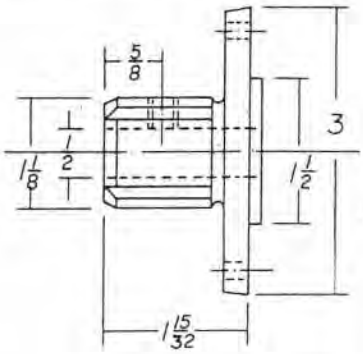

NO. 2-146-4S
MATL. ALUM.
(FORMALLY CALLED NO. 2-4G)

HUB POSITIONS

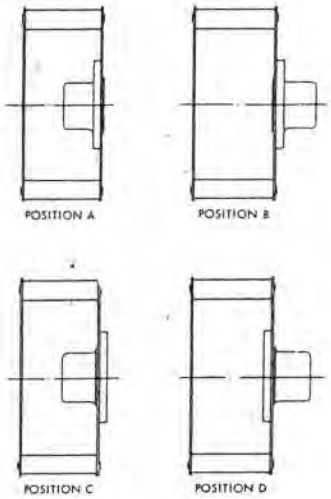

FOUR SPLINE HUBS WITH PAD EXTENSION

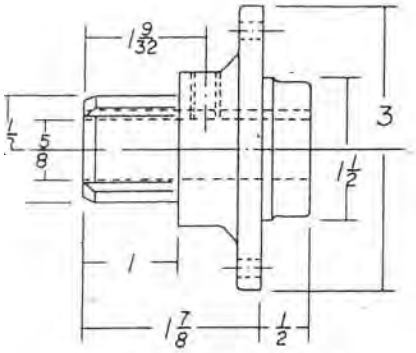

NO. 2-187P-4S
MATL. ALUM.
(FORMALLY CALLED NO. 2-SPL. 4 SPLINE)

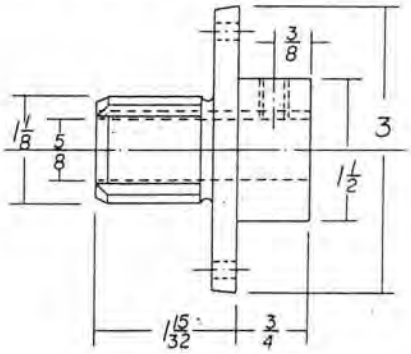

NO. 2-146P-4S
MATL. ALUM.
(FORMALLY CALLED NO. 2-4G WITH PAD)

BORE CONVERSION

Inches	Decimal	Millimeters
1/4	.25	6.3500
5/16	.3125	7.9375
3/8	.375	9.5250
7/16	.4375	11.1125
1/2	.5	12.7000
9/16	.5625	14.2875
5/8	.625	15.8750
3/4	.75	19.0500
7/8	.875	22.2250
15/16	.9375	23.8125
1	1.000	25.4001
1 1/16	1.0625	26.9876
1 1/8	1.125	28.5751
1 3/16	1.1875	30.1626
1 1/4	1.25	31.7501
1 3/8	1.375	34.9251
1 7/16	1.4375	36.5126
1 1/2	1.5	38.1001
1 5/8	1.625	41.2751
1 11/16	1.6875	42.8626
1 7/8	1.875	47.6251
1 15/16	1.9375	49.2126
2 1/8	2.125	53.9751
2 3/16	2.1875	55.5626
2 3/8	2.375	60.3251
2 7/16	2.4375	61.9126
2 11/16	2.6875	68.2626
2 7/8	2.875	73.0251
2 15/16	2.9375	74.6126
3	3.000	76.2002

HUBS FOR LOVEJOY COUPLINGS

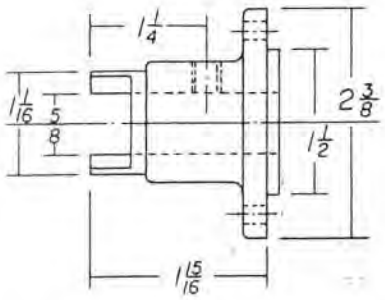

NO. 1-193-LJ
MATL. ALUM.
(FORMALLY CALLED NO. 1½ LOVEJOY)

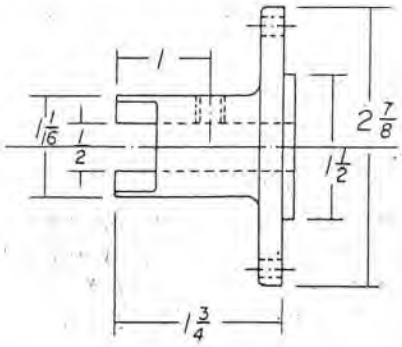

NO. 2-175-LJ
MATL. ALUM.
(FORMALLY CALLED NO. 2 LOVEJOY)

HUBS CAN BE HAD IN CAST IRON OR ALUMINUM

MATERIAL SPECIFIED UNDER EACH HUB IS IN PRESENT INVENTORY

DIMENSIONS OF HUBS

CODE OF HUB NUMBERS

The Jan-Air hub numbers form an identifying code which tells the Hub Punching. (Hub mounting hole and rivet D. B. C.) HUB barrel length. The letter "P" indicates pad extension. The term 4S indicates a Four Spline barrel for a Guardian coupling. The term LJ indicates a modification with .050 Jaws for Lovejoy flexible couplings.

NOTE: WITH THE EXCEPTION OF TURBO HUBS

Example:

NO. 1-143

#1 Hub Punching

1 7/16" Barrel Length

NO. 2-146P-4S

#2 Hub Punching

1 15/32" Barrel Length

Pad Extension

Four Spline Barrel

NO. 1-193-LJ

#1 Hub Punching

1 15/16" Barrel Length

.050 "Lovejoy" Jaws

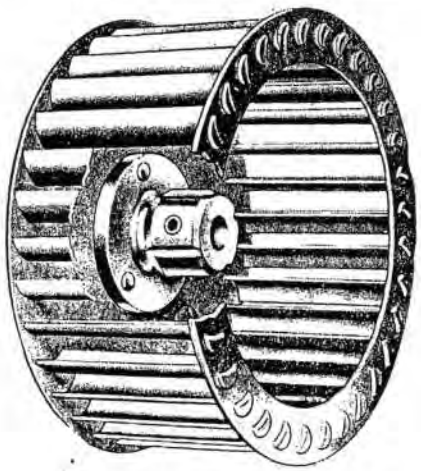

A combination Guardian coupling hub mounted on an oil burner fan: note the wide flange on the hub and solid iron or aluminum rivets as the case might require.

HUBS CAN BE HAD IN CAST IRON OR ALUMINUM

DIMENSIONS OF HUBS

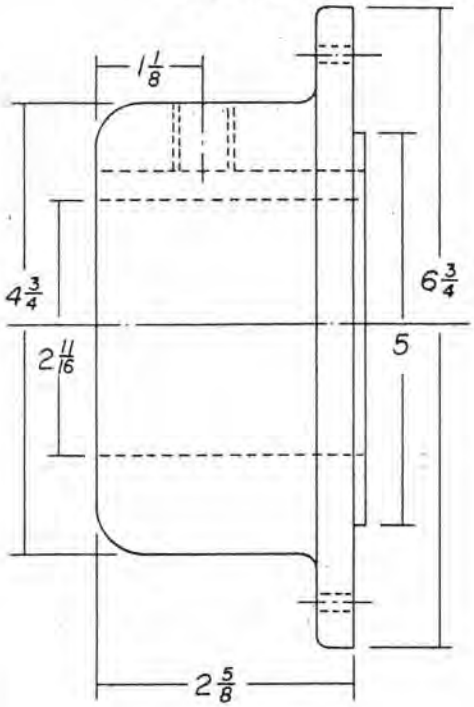

NO. 3-262
MATL. CAST IRON
(FORMALLY CALLED NO. 3300)

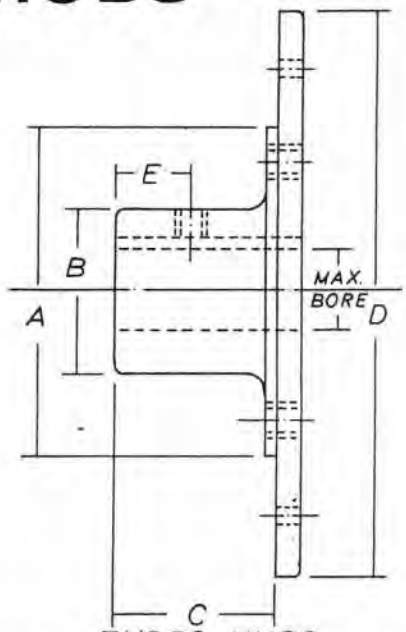

TURBO HUBS

HUB NO.	A	B	C	D	E	MAX. BORE
0038	3 1/2	1 3/4	1 5/8	6	3/4	7/8
3200	4 1/8	2 1/8	1 3/4	8	7/8	1 1/8
3190	4 1/2	2 5/8	2 1/16	10	1	1 3/4
3195	5	3	2 13/16	12	1 3/8	1 5/8

MATL. ALUM.

SPECIAL COMBINATIONS

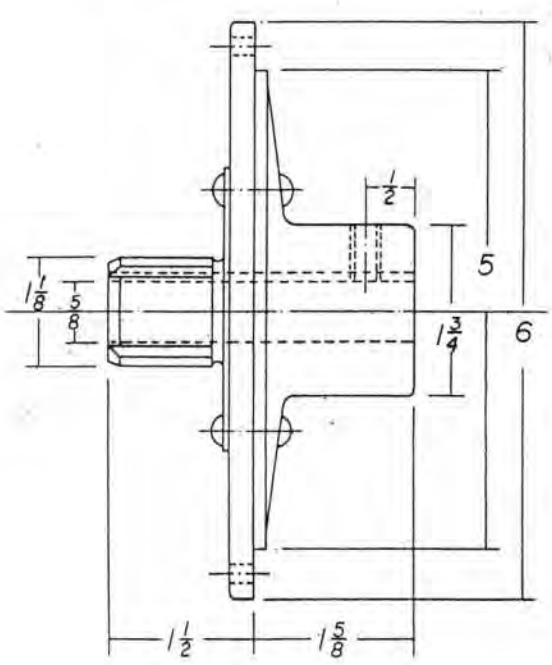

COMBINATION HUB
NO. 3-175 & 2-146-4S
MATL. ALUM.
(FORMALLY CALLED NO. 3S & 2-4G)

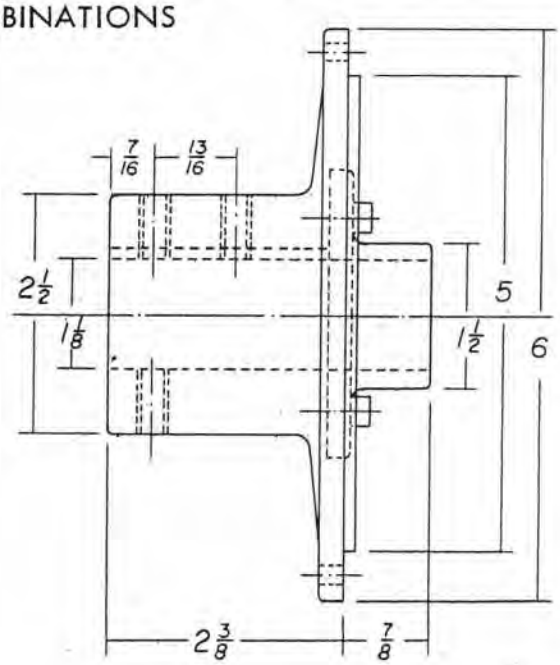

COMBINATION HUB
NO. 3-237 & 2-106
MATL. ALUM.
(FORMALLY CALLED NO. 4 & 2S)

HUBS CAN BE HAD IN CAST IRON OR ALUMINUM
MATERIAL SPECIFIED UNDER EACH HUB IS IN PRESENT INVENTORY

Janette Blower Wheels

DIMENSIONS OF HUBS

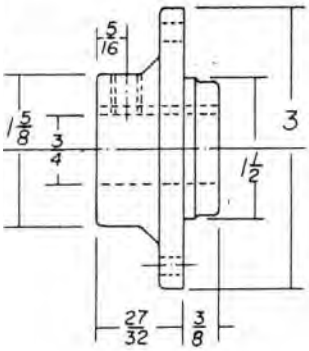

NO. 2-084P
MATL. ALUM.

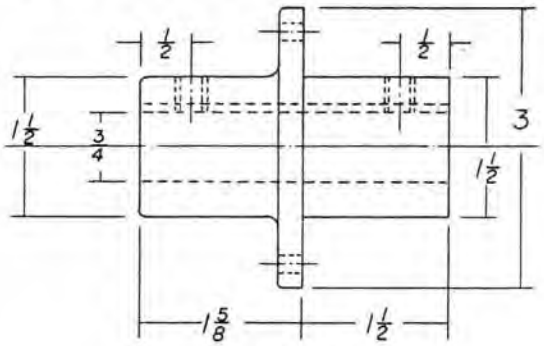

NO. 2-162P
MATL. CAST IRON
(FORMALLY CALLED NO. SD-5)

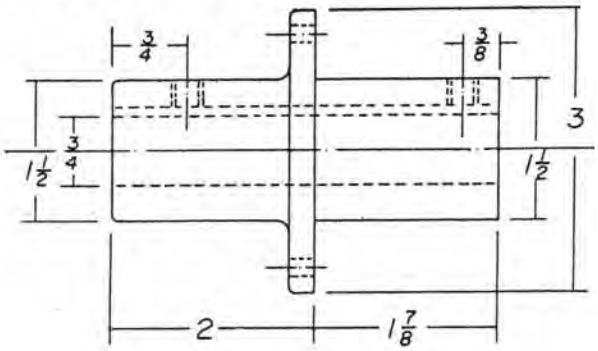

NO. 2-200P
MATL. CAST IRON

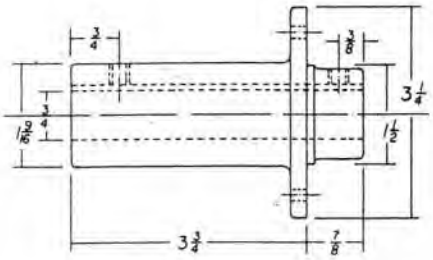

NO. 2-375P
MATL. CAST IRON

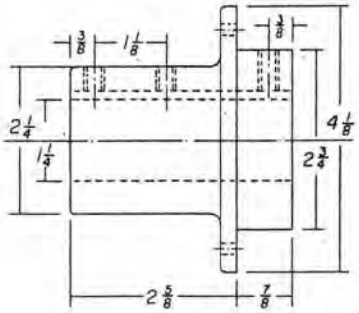

NO. 6-262P
MATL. ALUM.
(FORMALLY CALLED SPL. NO.6 WITH PAD)

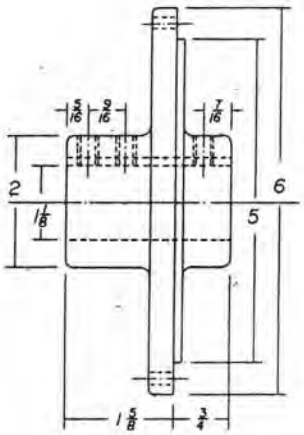

NO.3-162P
MATL. CAST IRON
(FORMALLY CALLED NO. 355)

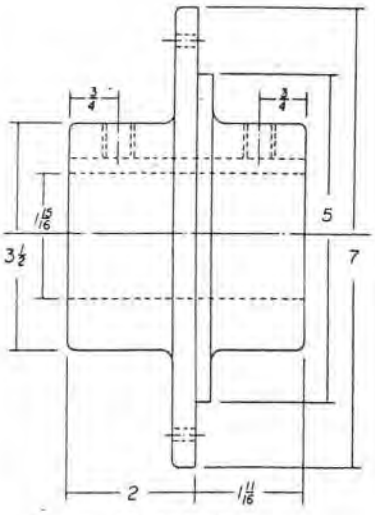

NO.3-200P
MATL. ALUM.

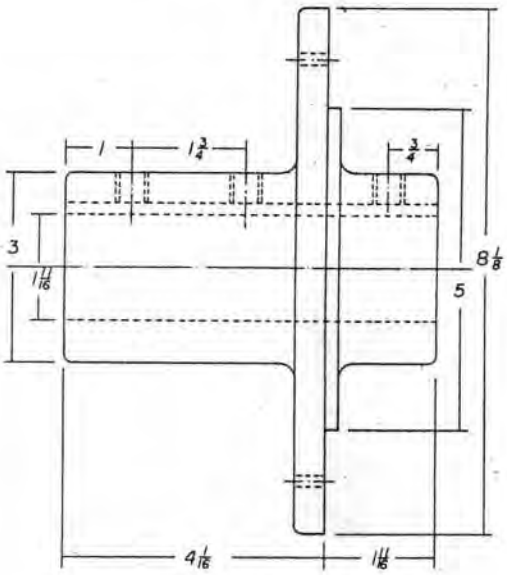

NO. 3-406P
MATL. ALUM.
(FORMALLY CALLED NO.3400 WITH PAD)

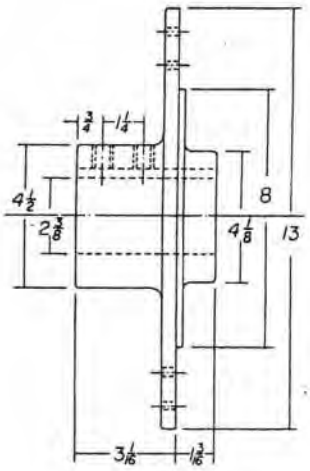

NO.8-306P
MATL. ALUM.

HUBS CAN BE HAD IN CAST IRON OR ALUMINUM
MATERIAL SPECIFIED UNDER EACH HUB IS IN PRESENT INVENTORY

JAN-AIR, inc.

RICHMOND, ILL. 60071

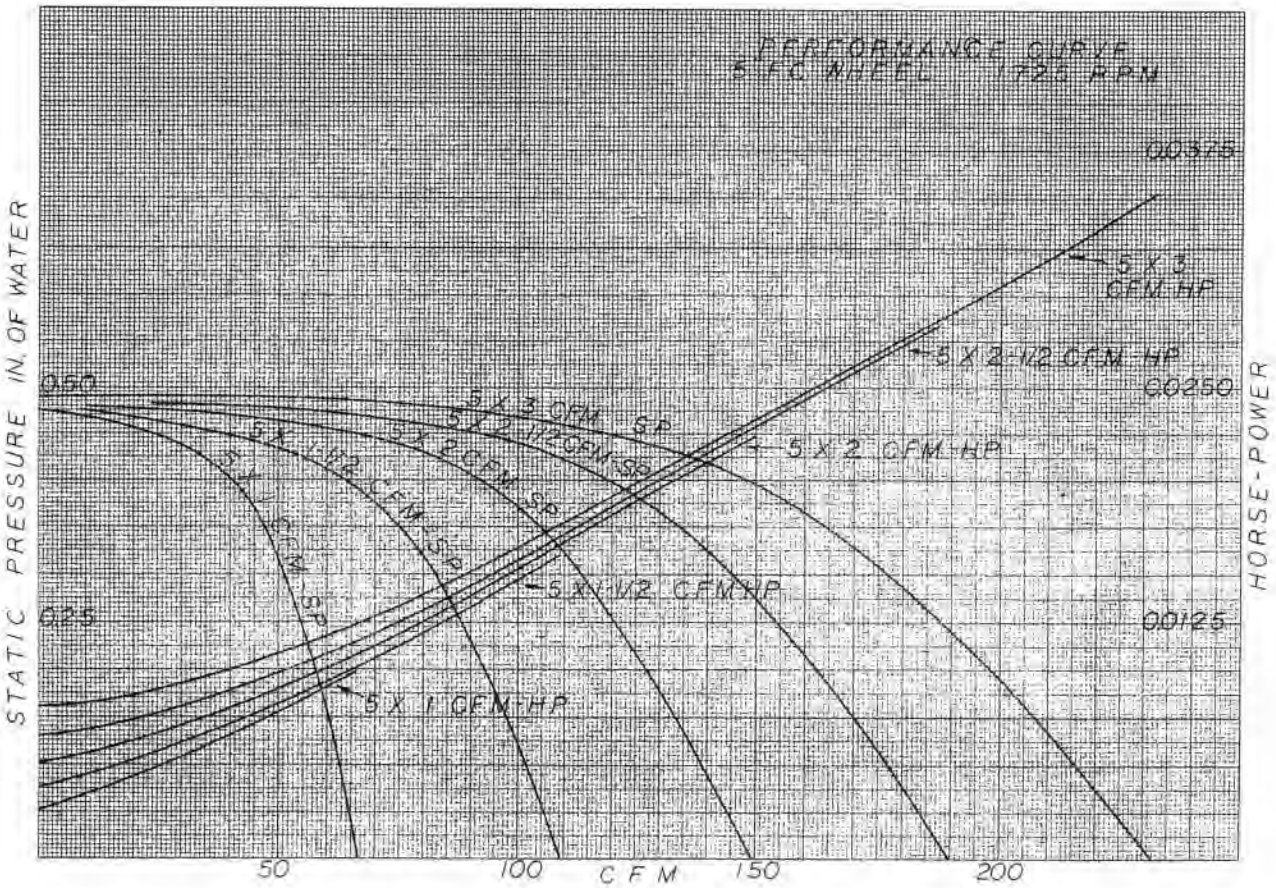

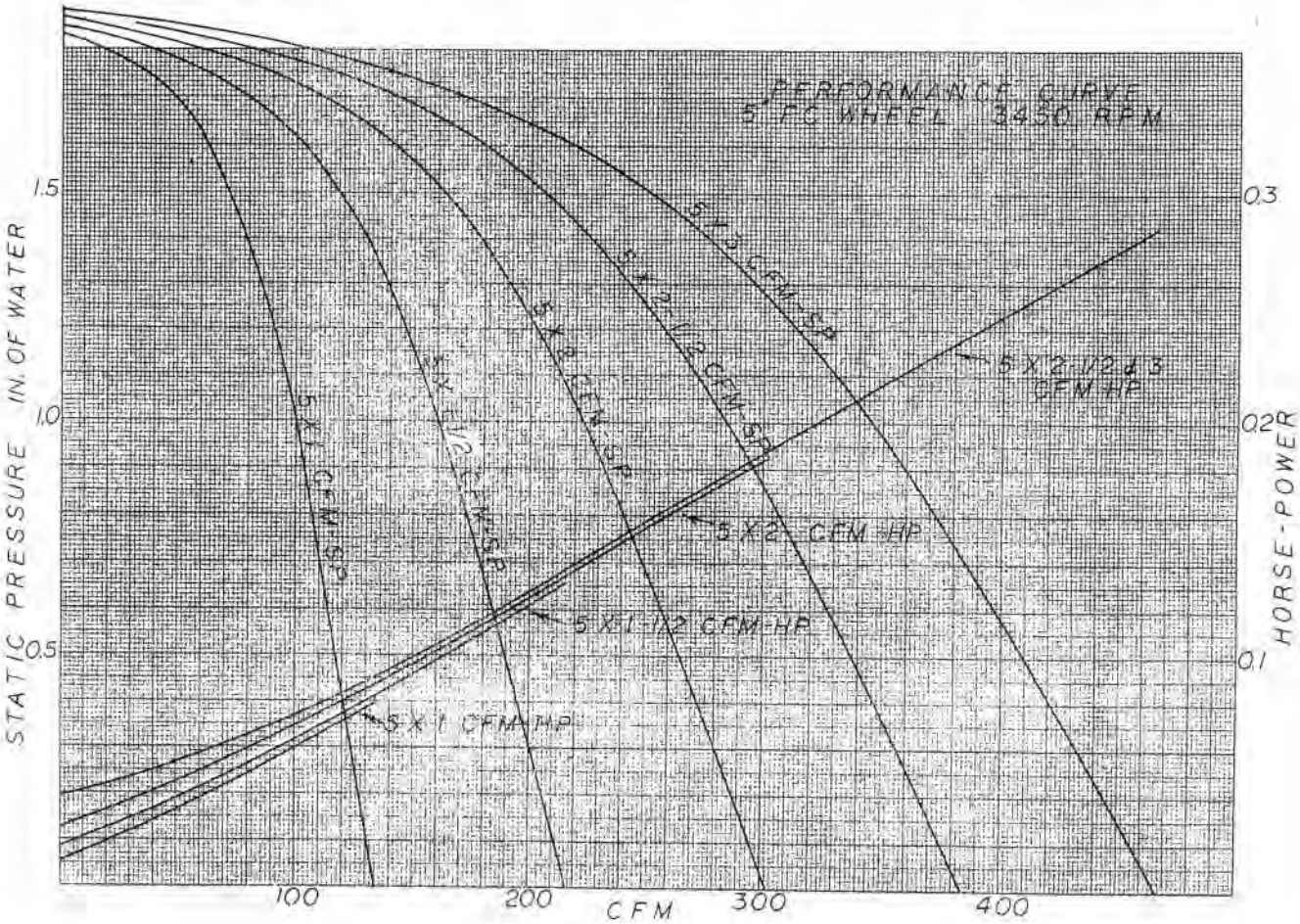

JAN-AIR, inc.

RICHMOND, ILL. 60071

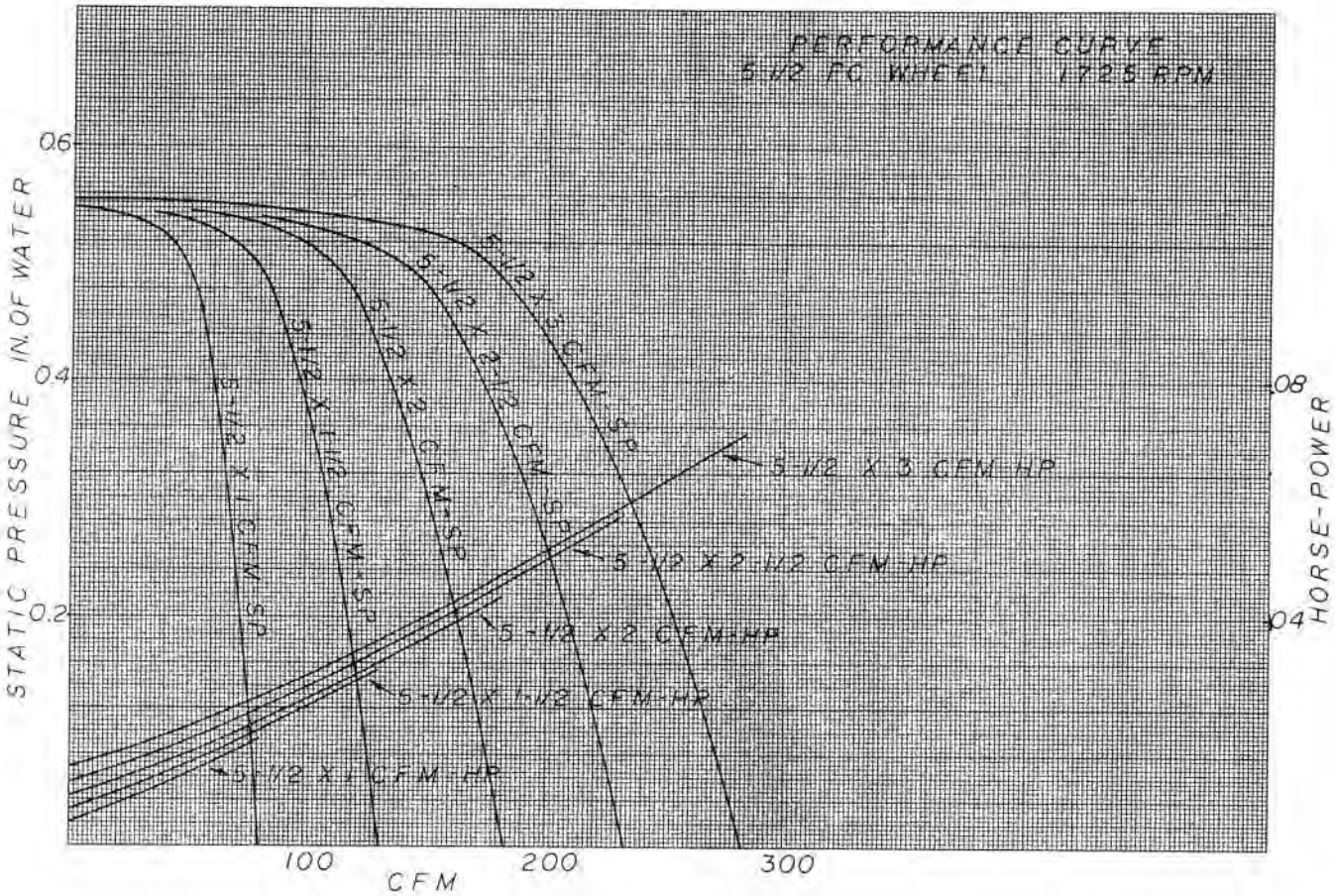

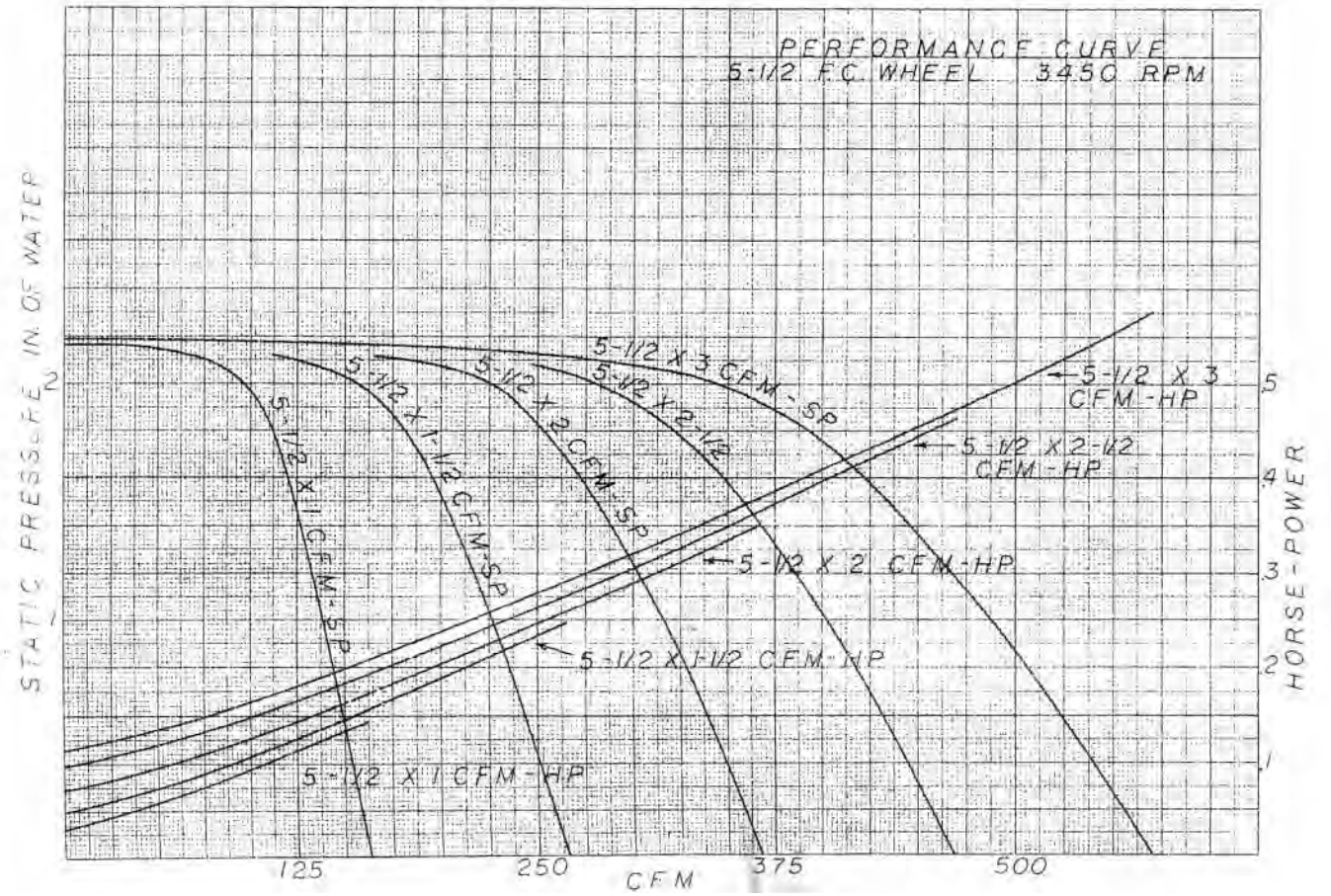

JAN-AIR, Inc.

RICHMOND, ILL. 60071

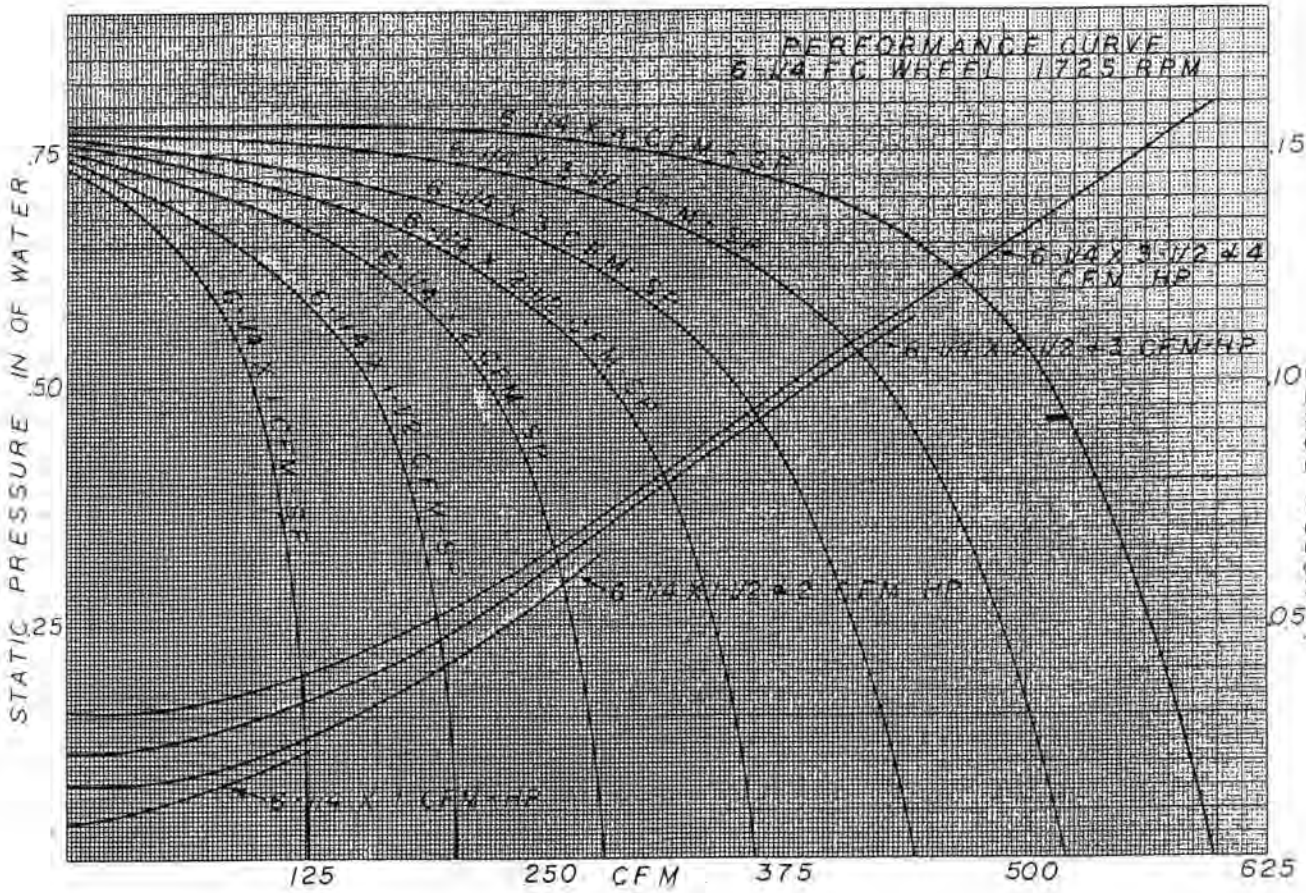

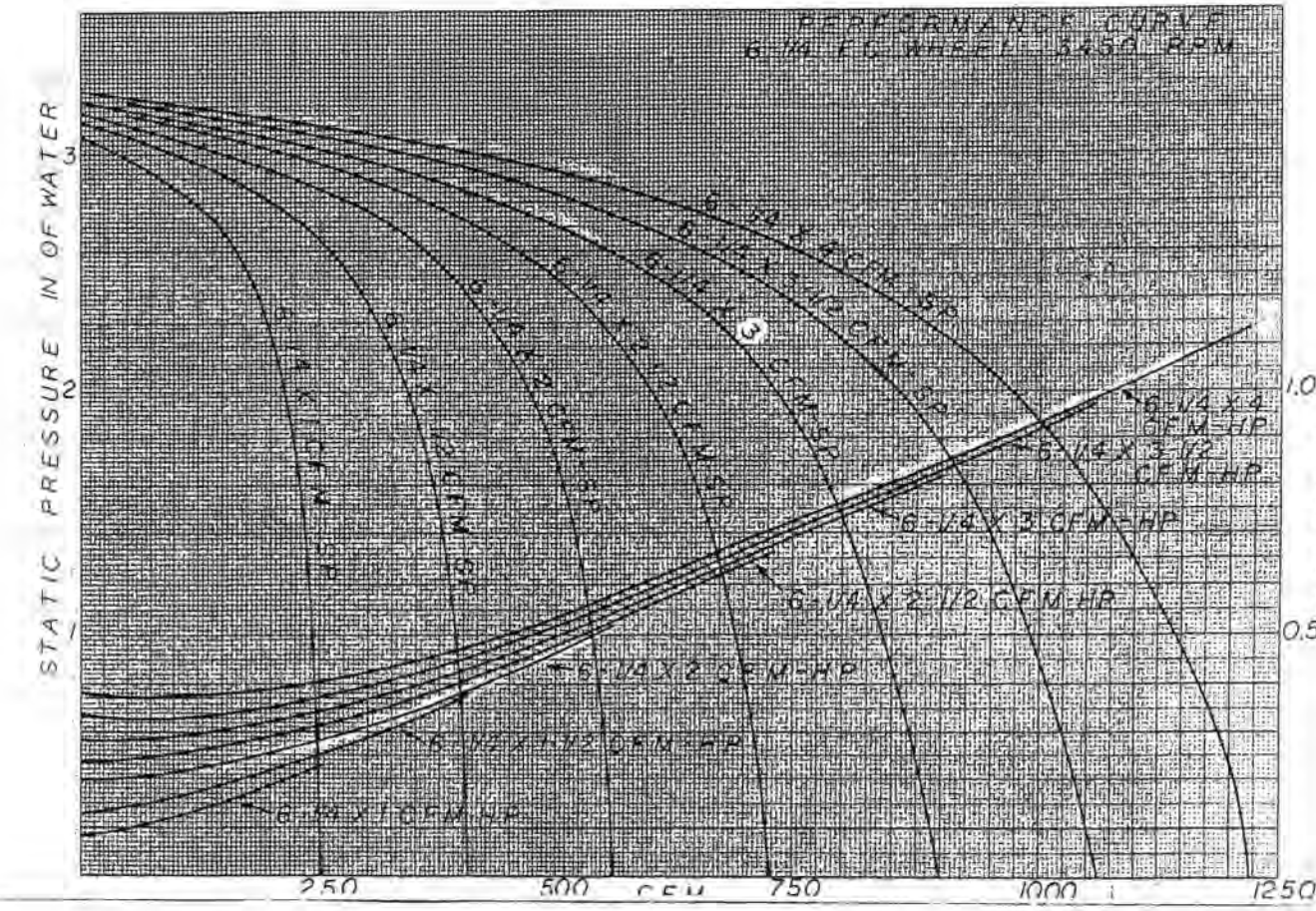

JAN-AIR, Inc.

RICHMOND, ILL. 60071

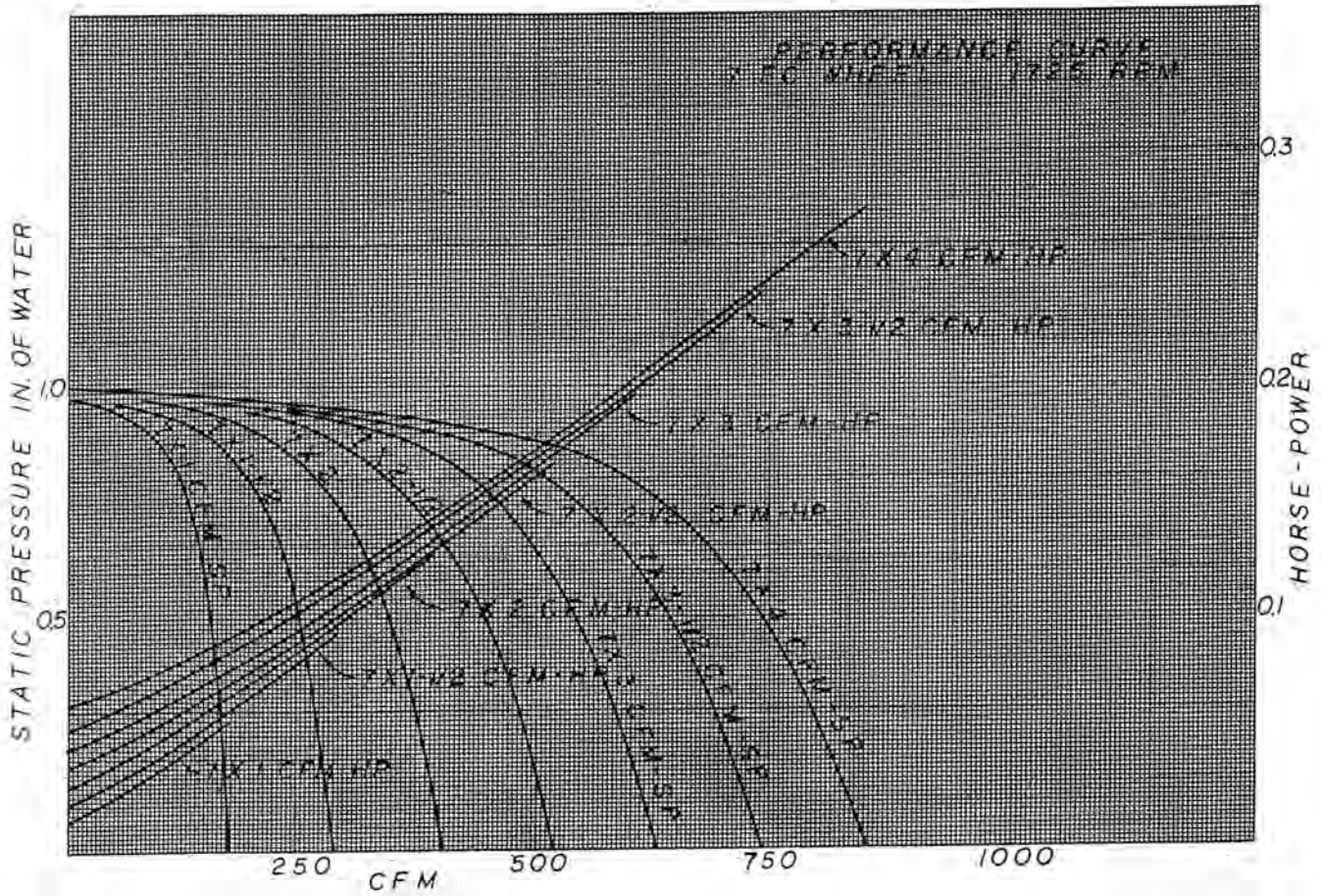

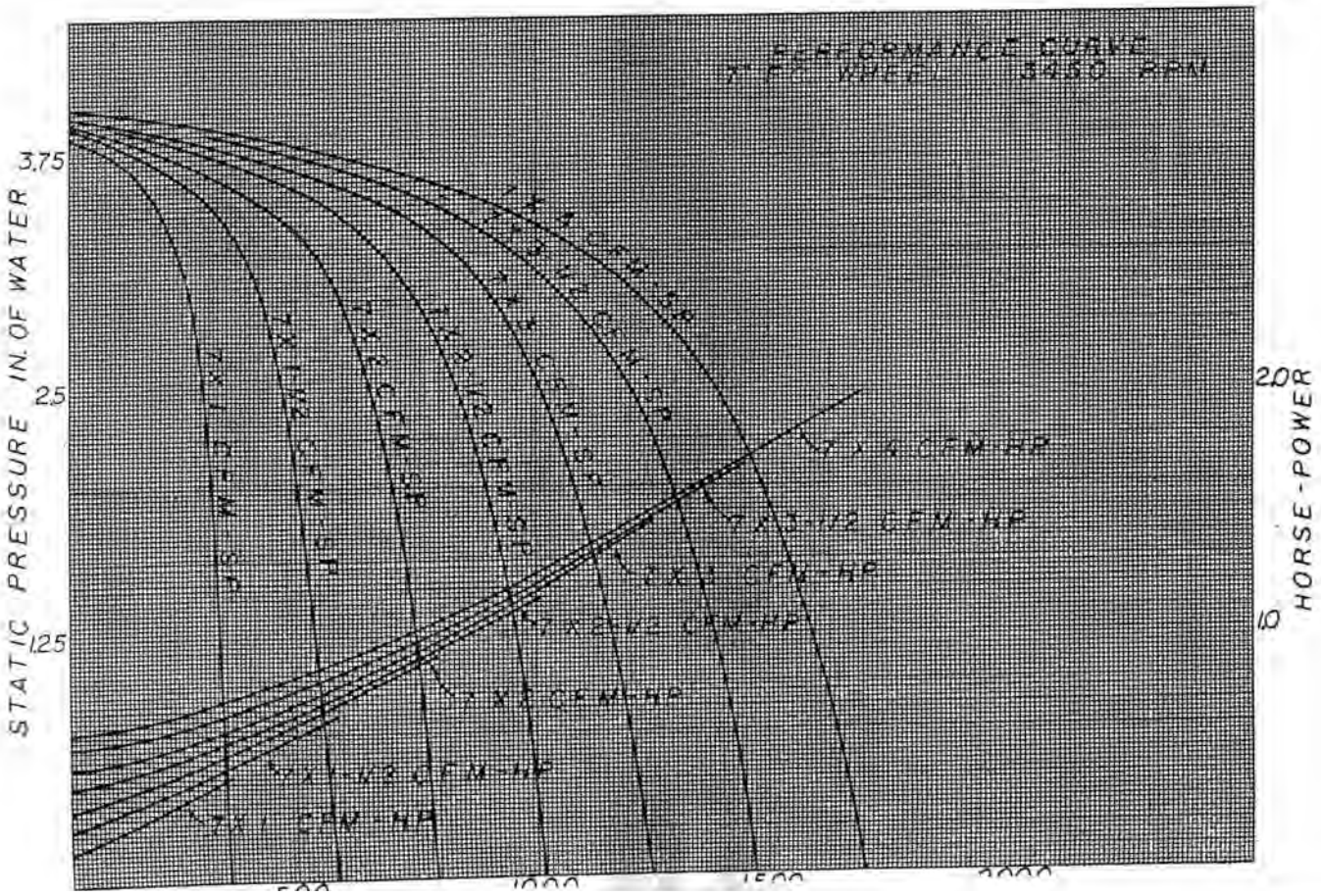

JAN-AIR, inc.

RICHMOND, ILL. 60071

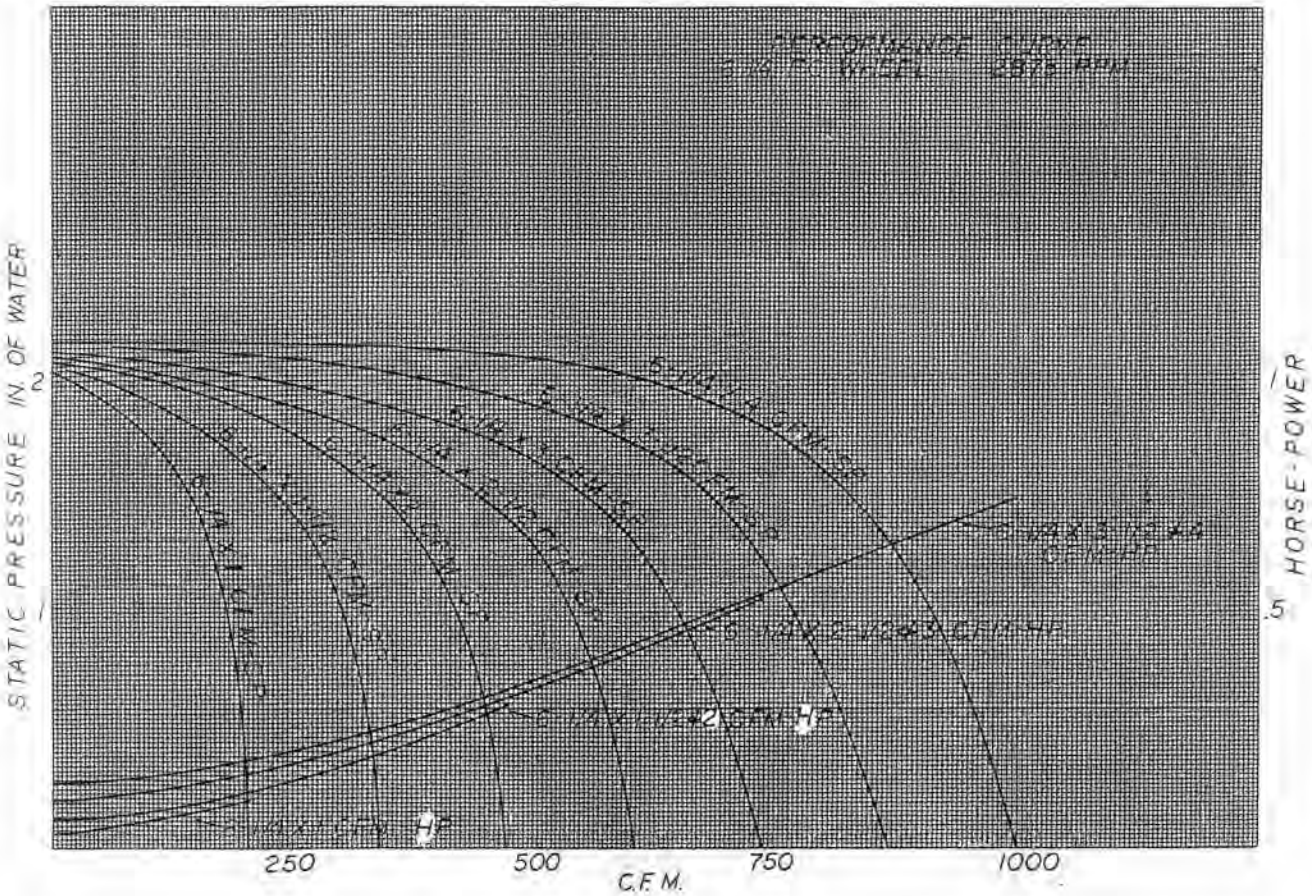

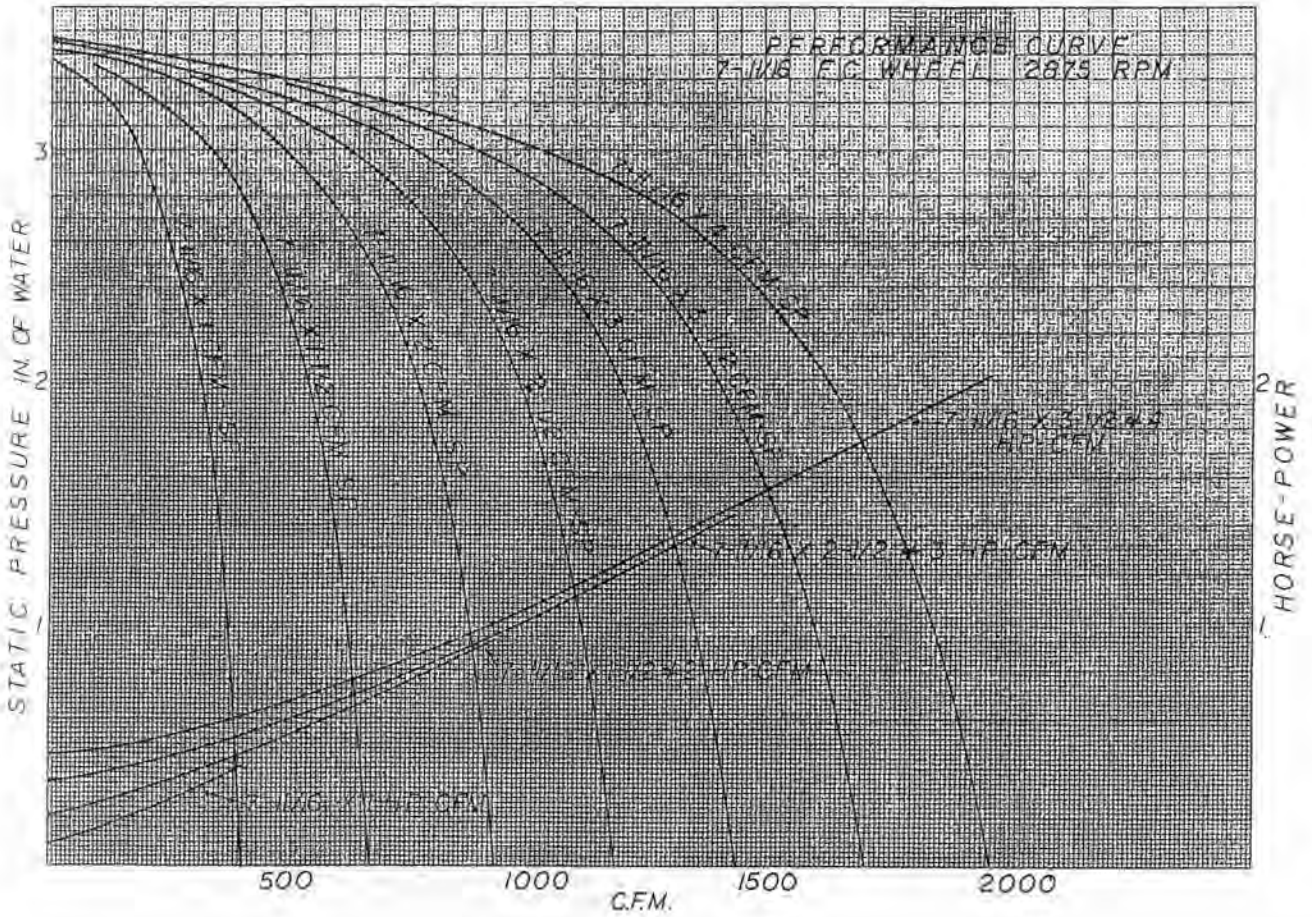

JAN-AIR, Inc.

RICHMOND, ILL. 60071

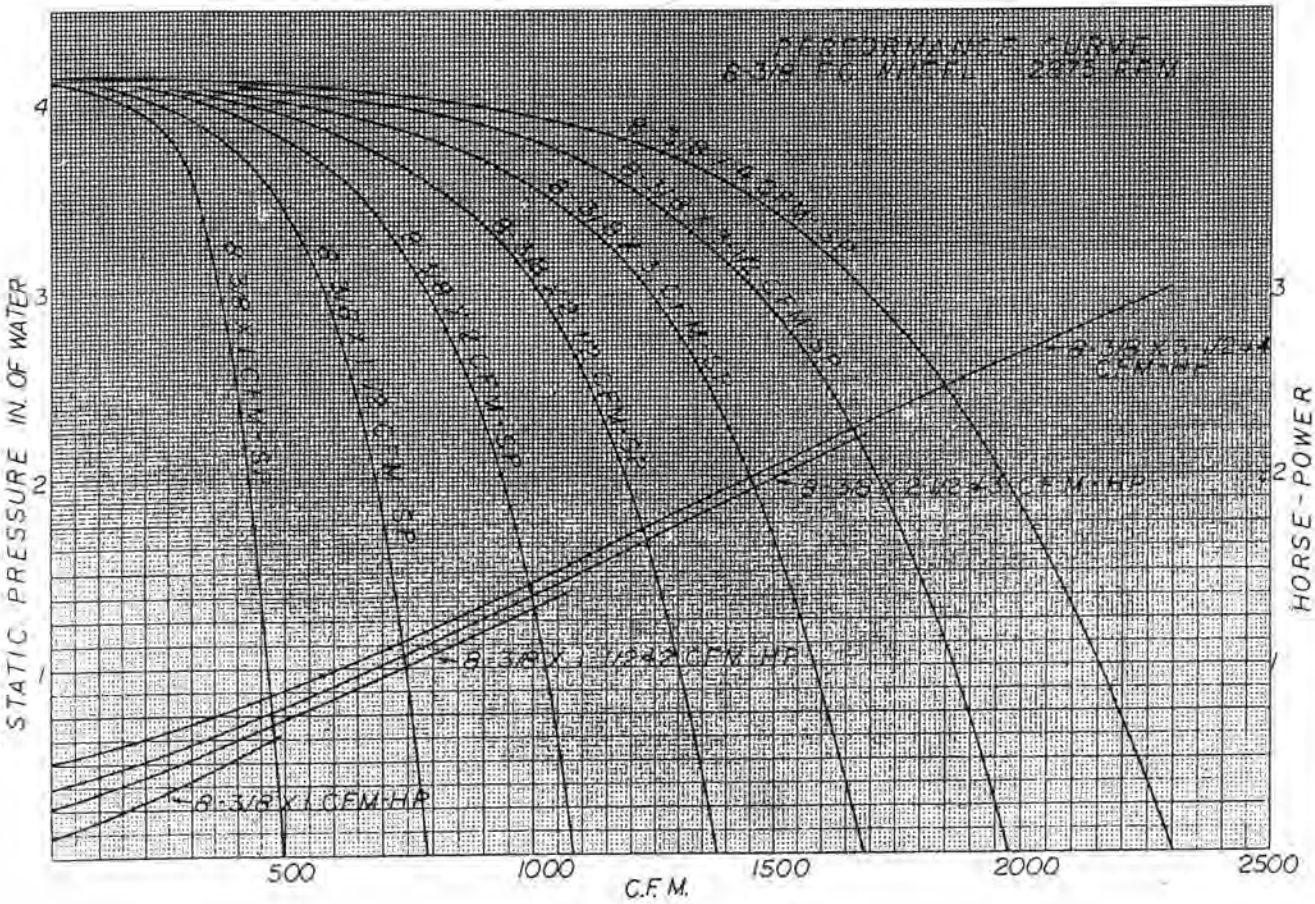

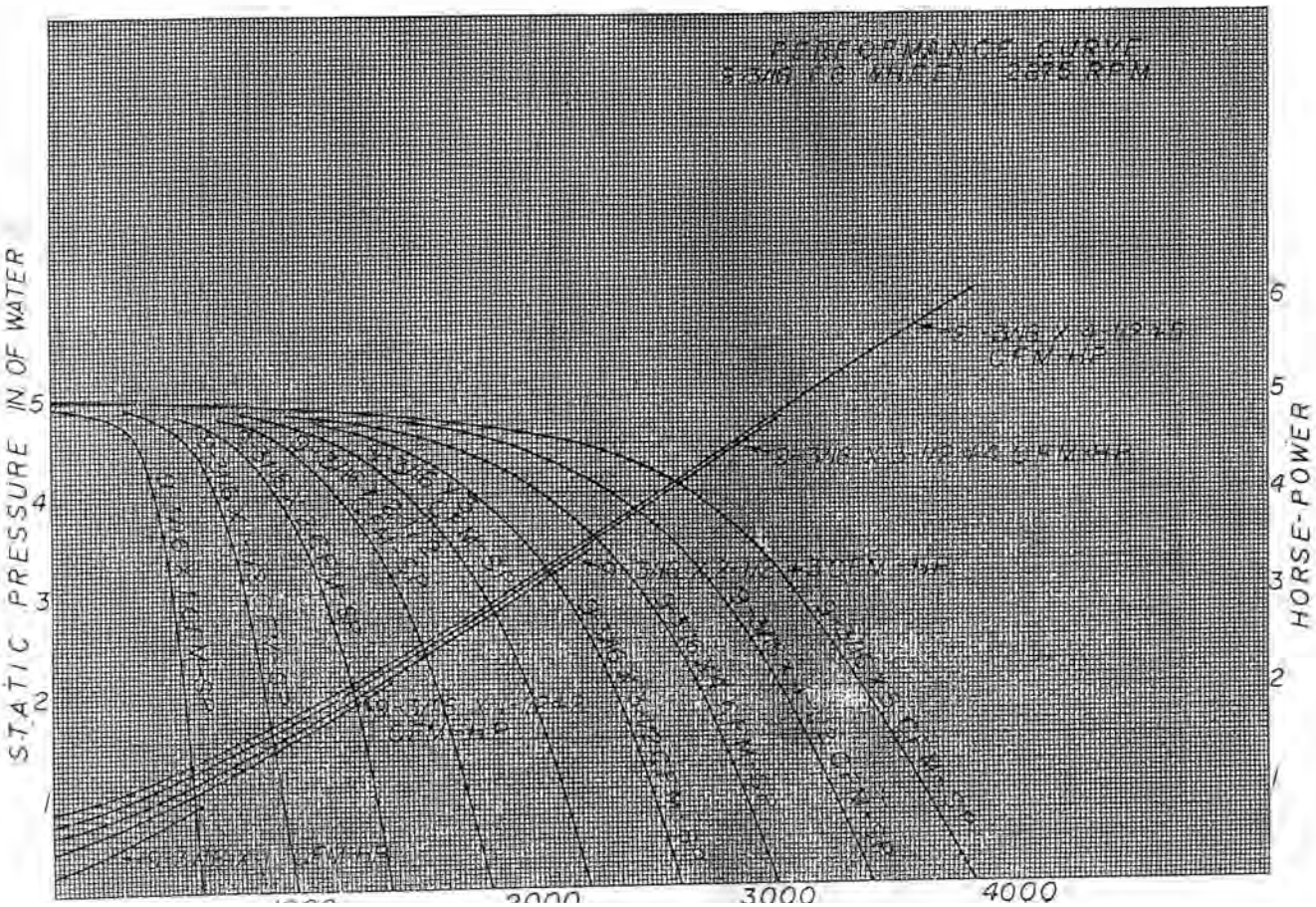

JAN-AIR, inc.

RICHMOND, ILL. 60071

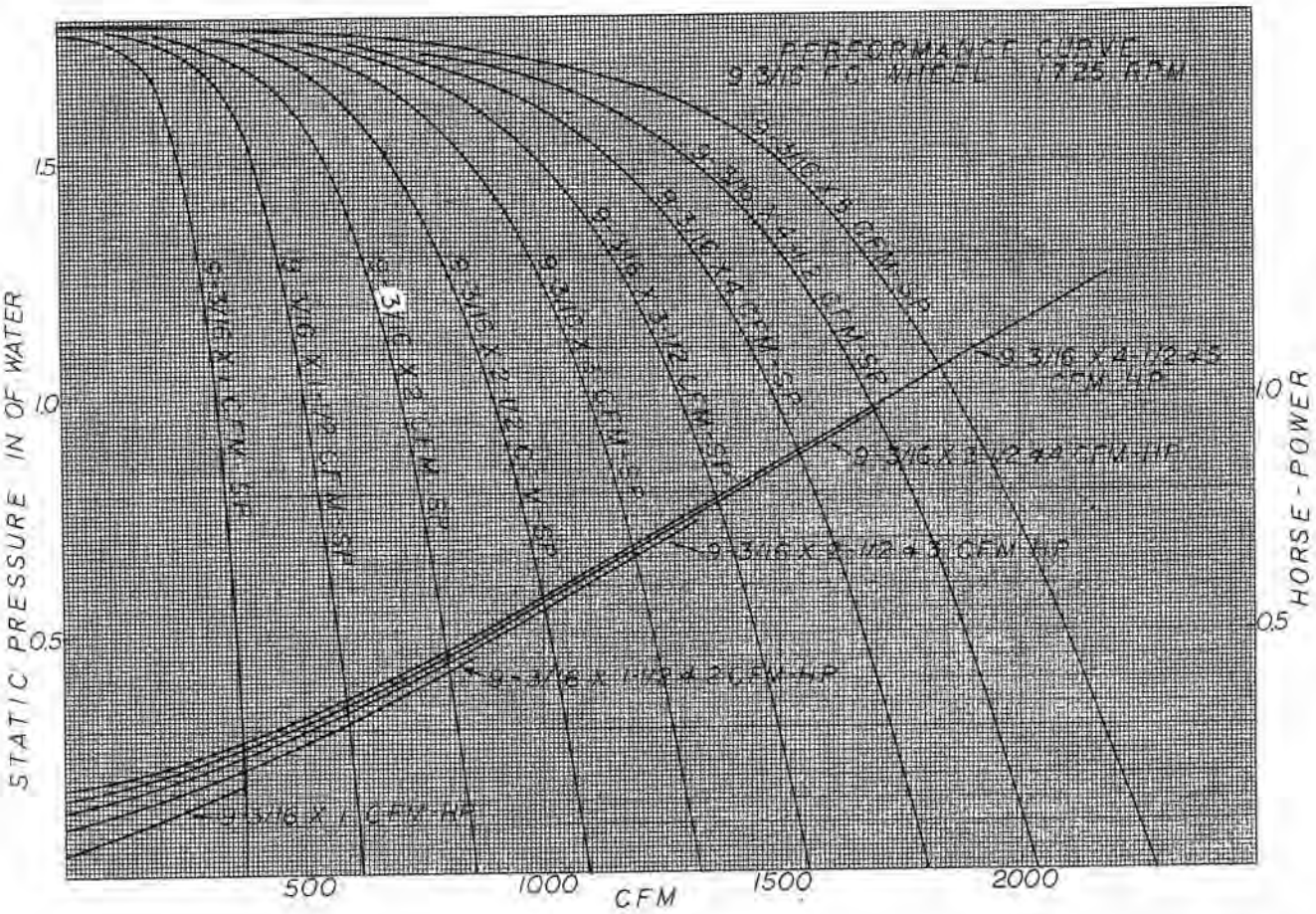

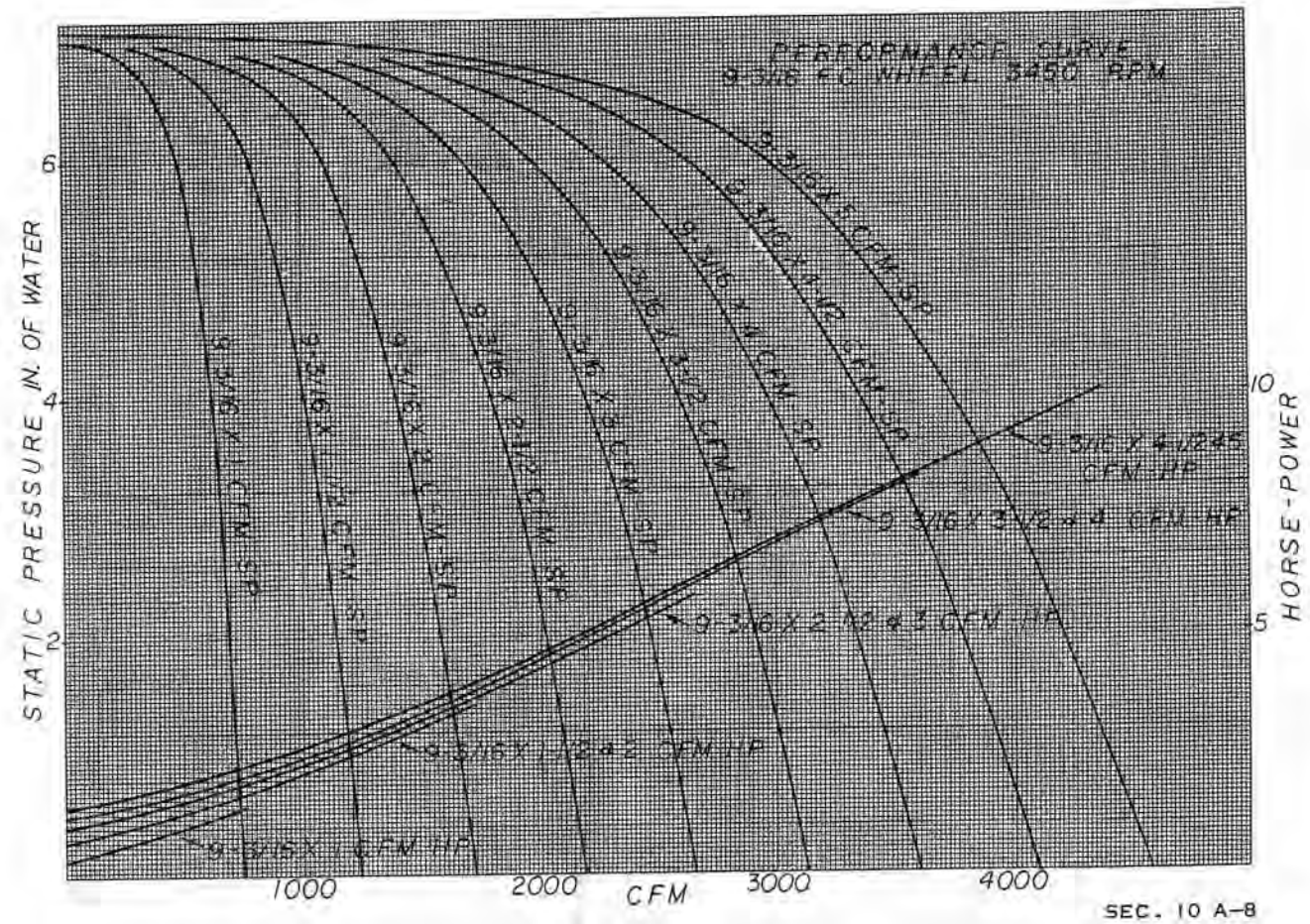

JAN-AIR, inc.

RICHMOND, ILL. 60071

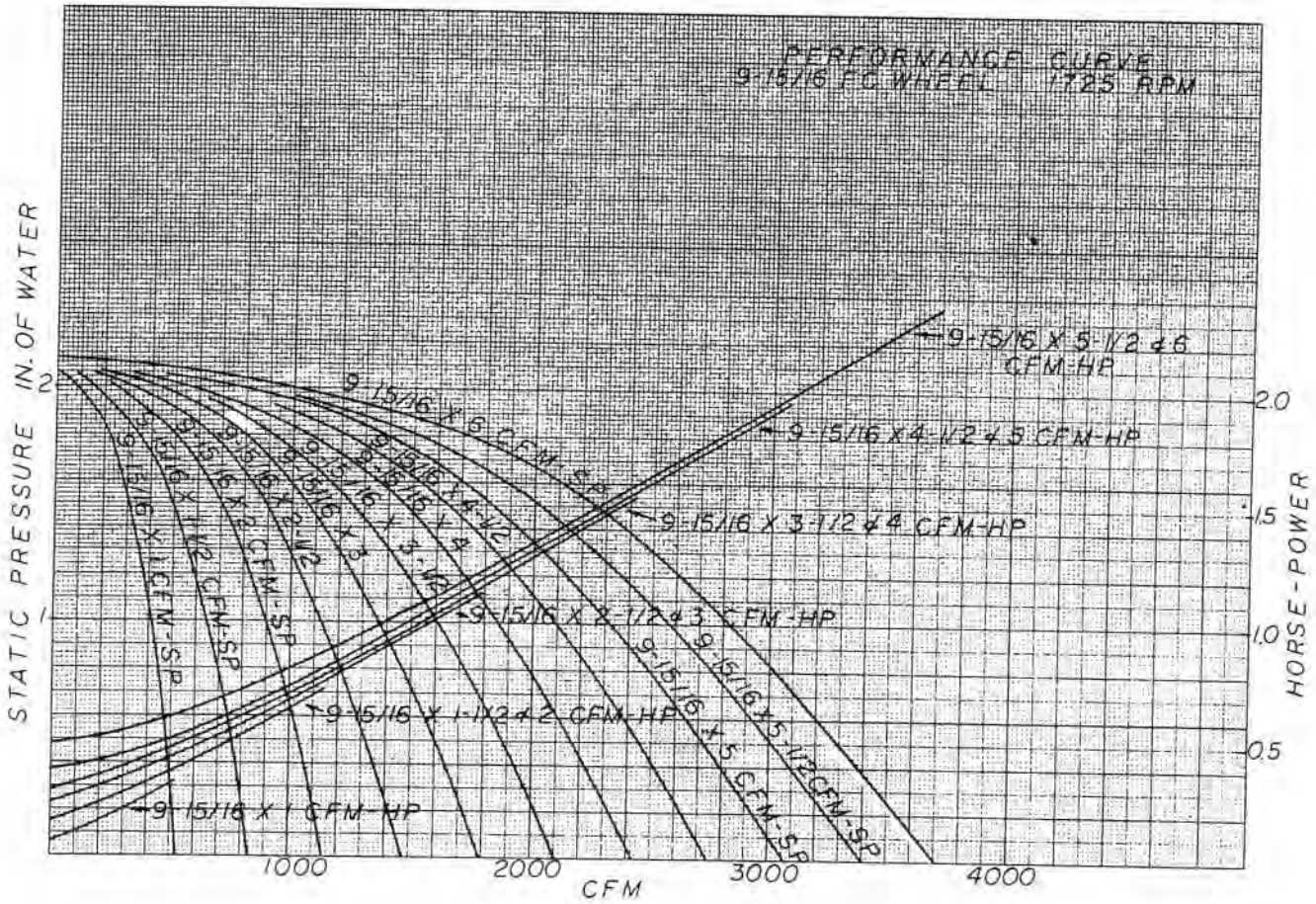

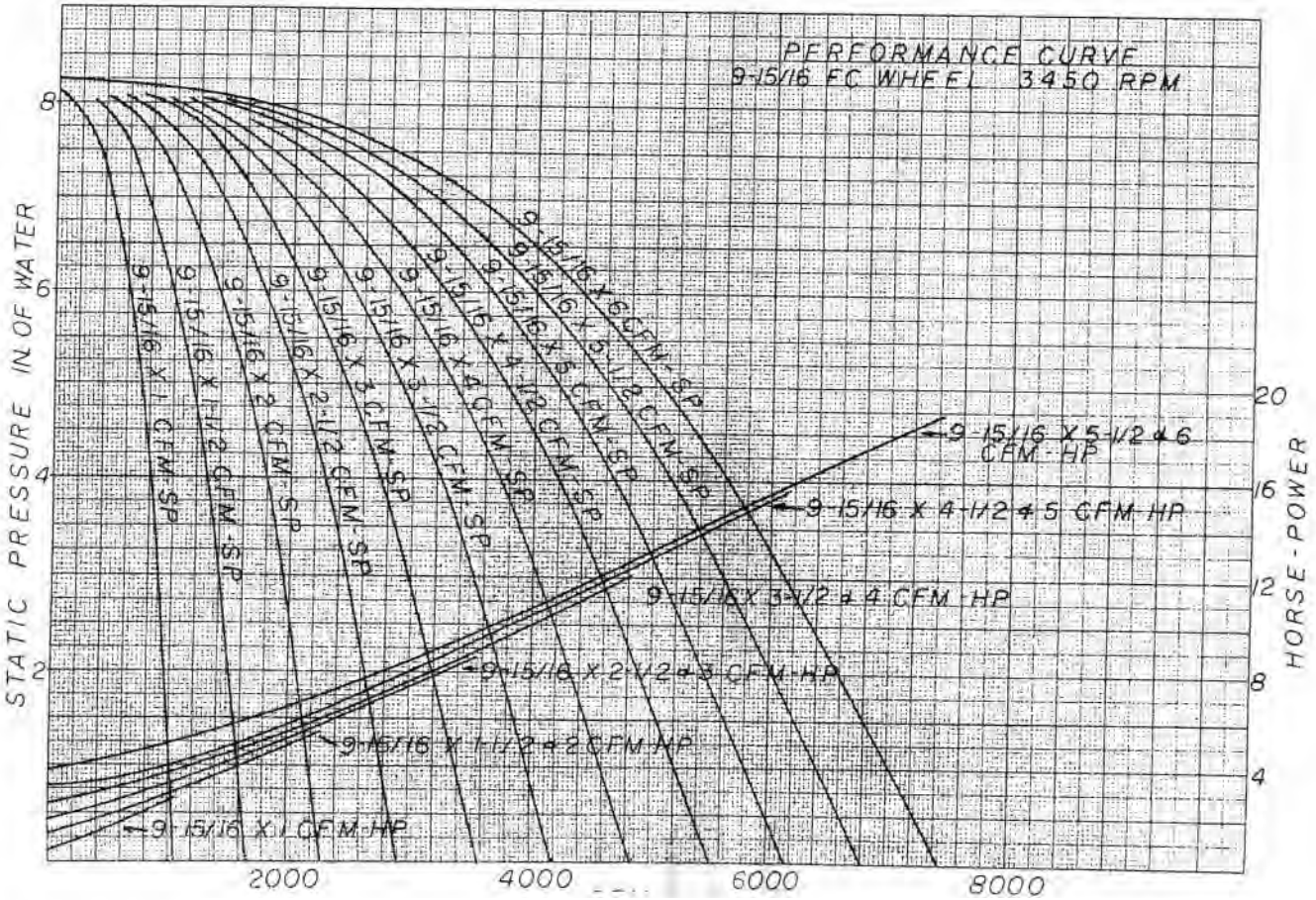

JAN-AIR, Inc.

RICHMOND, ILL. 60071

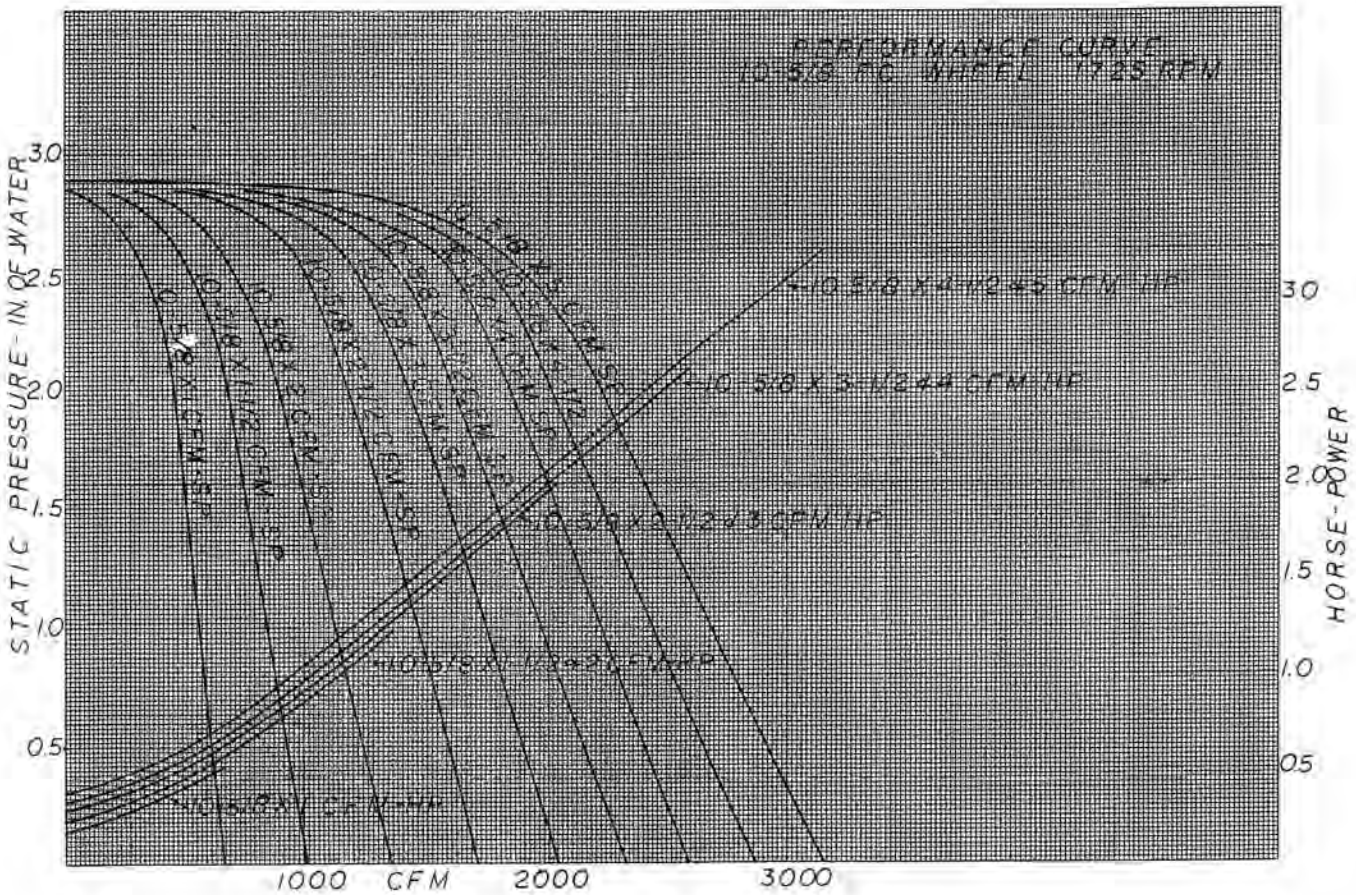

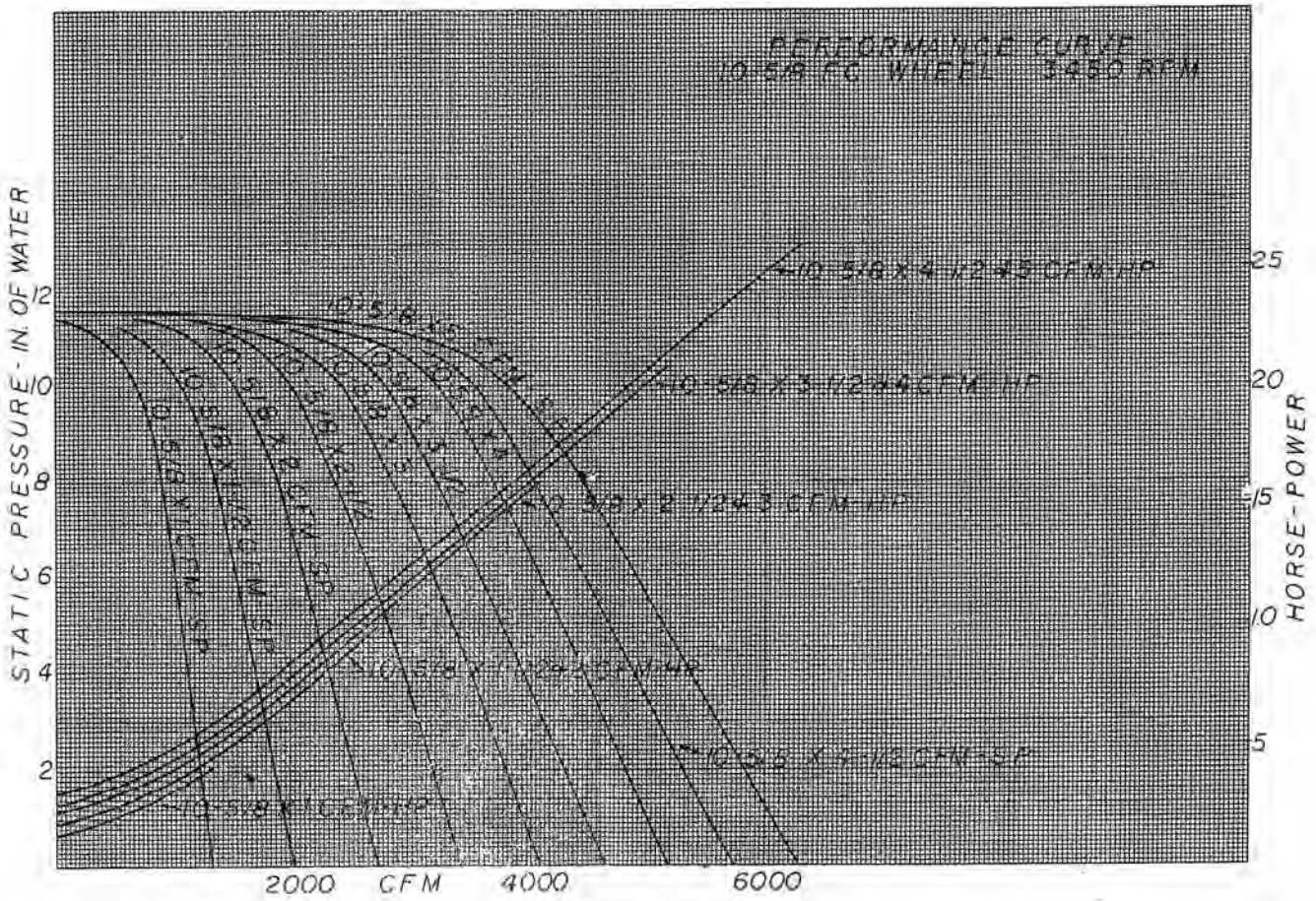

JAN-AIR, Inc.

RICHMOND, ILL. 60071

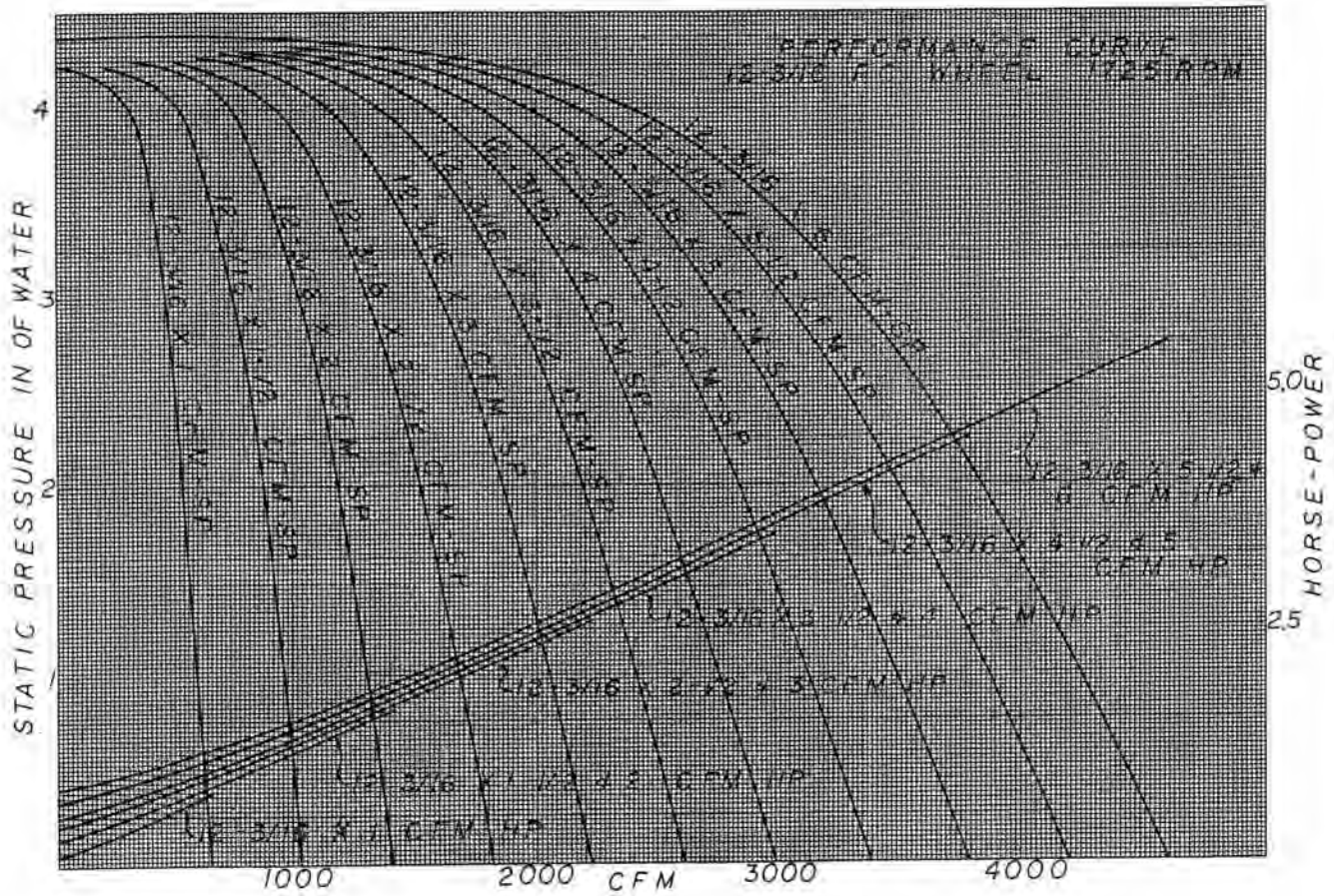

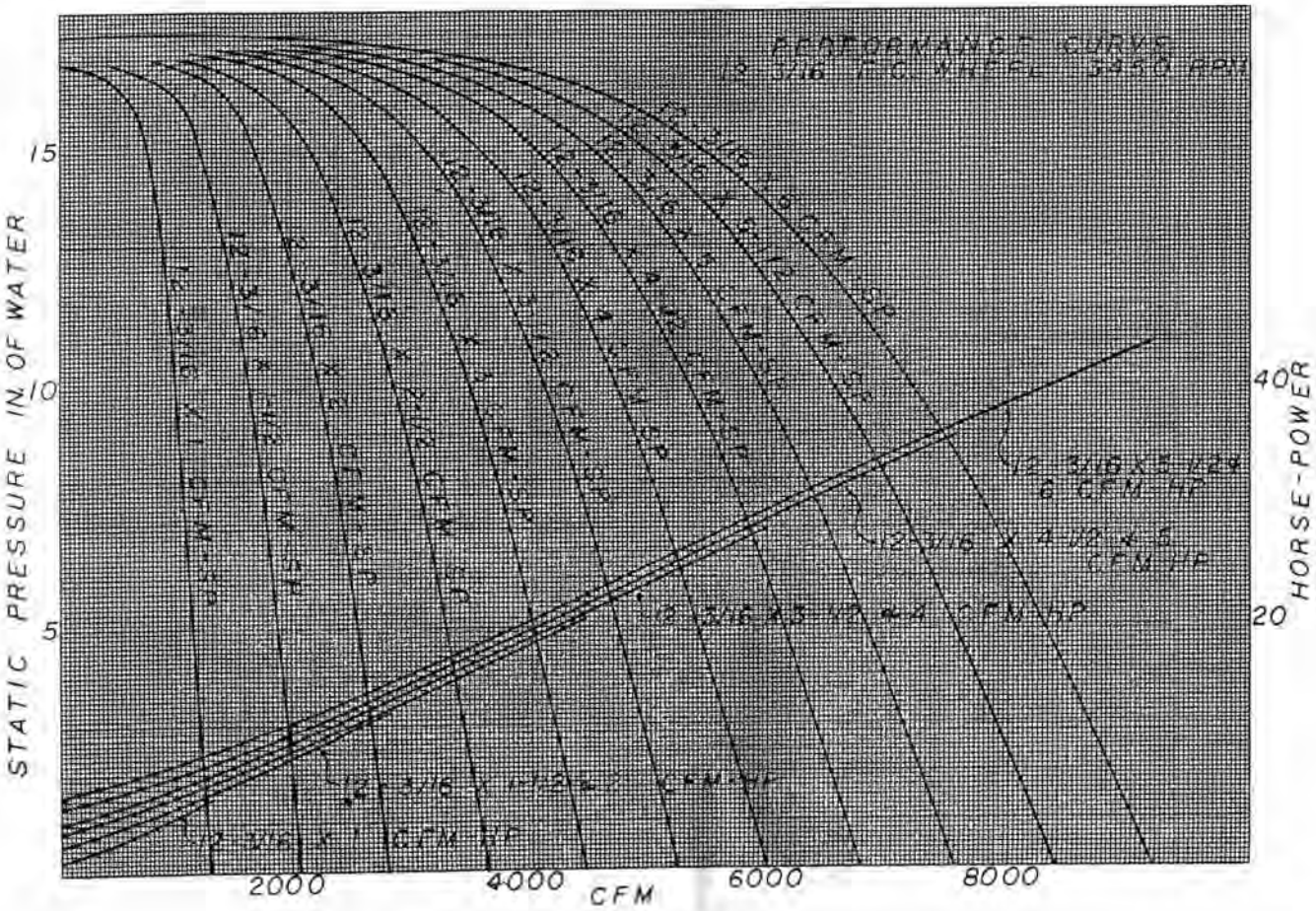

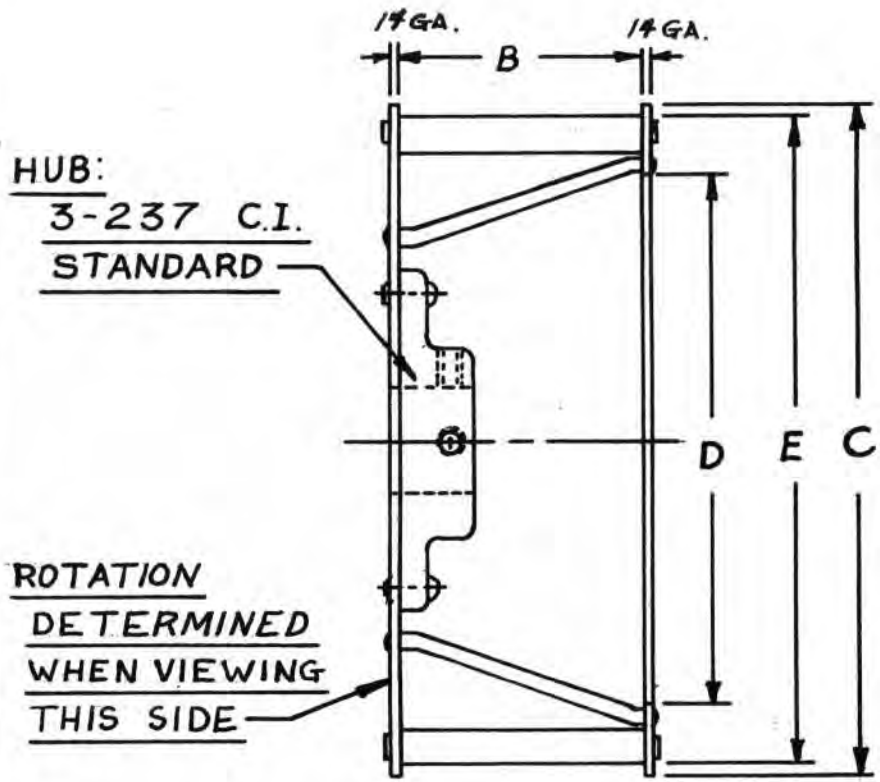

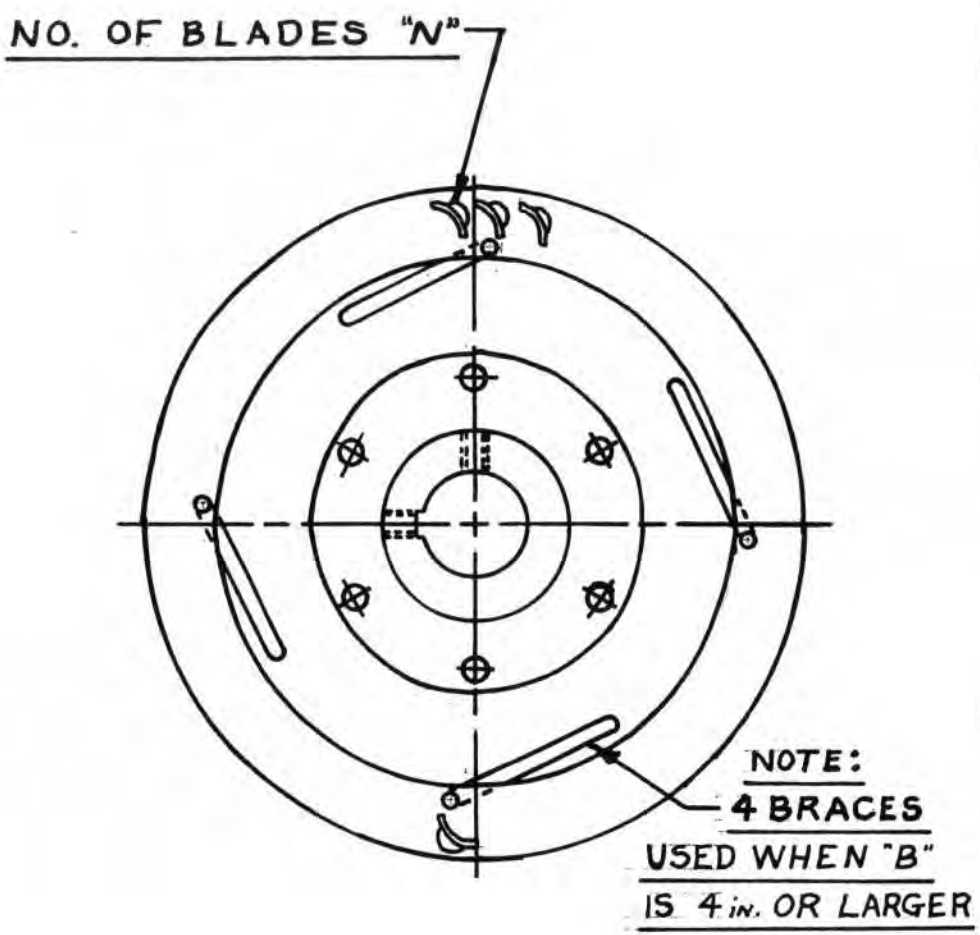

A	B	C	D	E	N
$12\frac{3}{16}$	1-6	$12\frac{5}{16}$	$9\frac{15}{16}$	$11\frac{7}{8}$	40
$13\frac{1}{2}$	$1-6\frac{1}{2}$	$13\frac{7}{8}$	$11\frac{3}{4}$	$13\frac{1}{2}$	48
15	$1-7\frac{1}{2}$	$15\frac{3}{8}$	$13\frac{1}{16}$	15	48
$16\frac{1}{2}$	1-8	$16\frac{7}{8}$	$14\frac{3}{8}$	$16\frac{7}{8}$	48

DIMENSIONS OF FORWARD
H.D. CURVE WHEELS
DYNAMIC BALANCE FOR
1725 R.P.M.

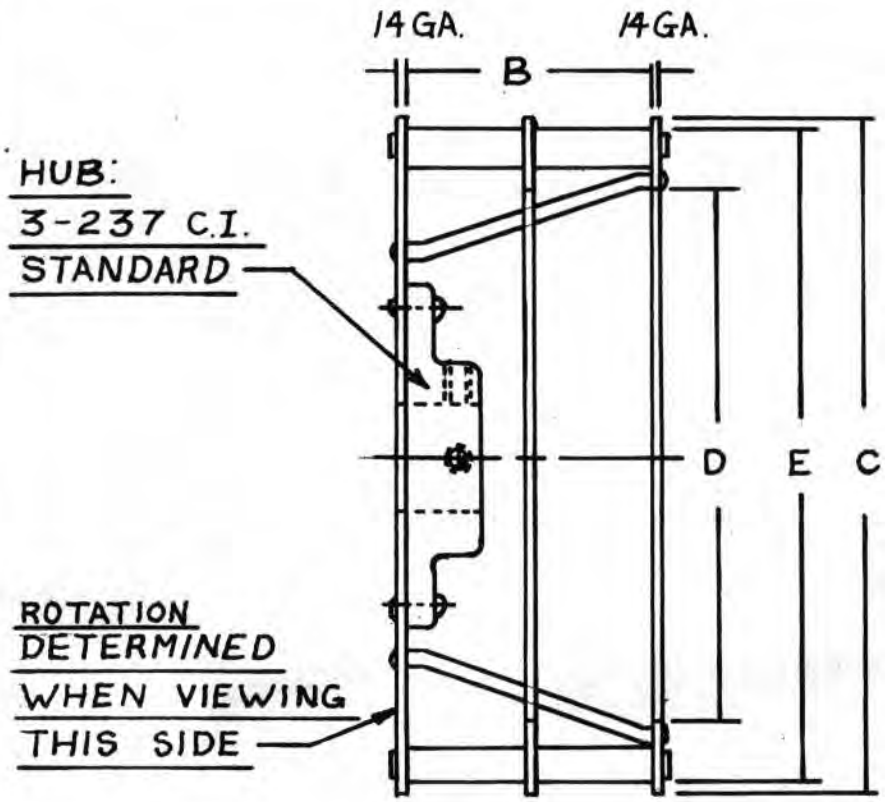

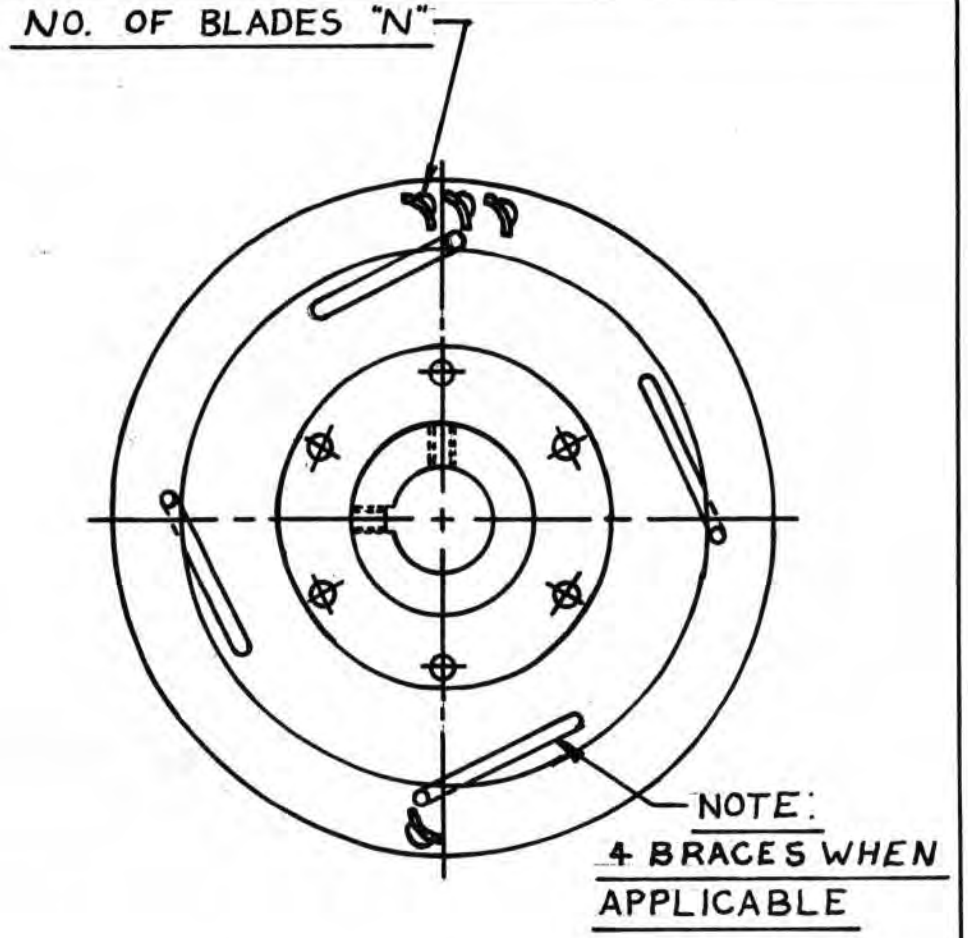

A	B	C	D	E	N
$12\frac{3}{16}$	1-6	$12\frac{5}{16}$	$9\frac{15}{16}$	$11\frac{7}{8}$	40
$13\frac{1}{2}$	1-5	$13\frac{7}{8}$	$11\frac{3}{4}$	$13\frac{1}{2}$	48
15	1-4	$15\frac{3}{8}$	$13\frac{1}{16}$	15	48
$16\frac{1}{2}$	1-4	$16\frac{7}{8}$	$14\frac{3}{8}$	$16\frac{1}{2}$	48

DIMENSIONS OF FORWARD
H.D. CURVE WHEELS DYNAMIC
BALANCED FOR 3450 R.P.M.

JAN-AIR, INC.

RICHMOND, ILLINOIS

PERFORMANCE DATA Type FC

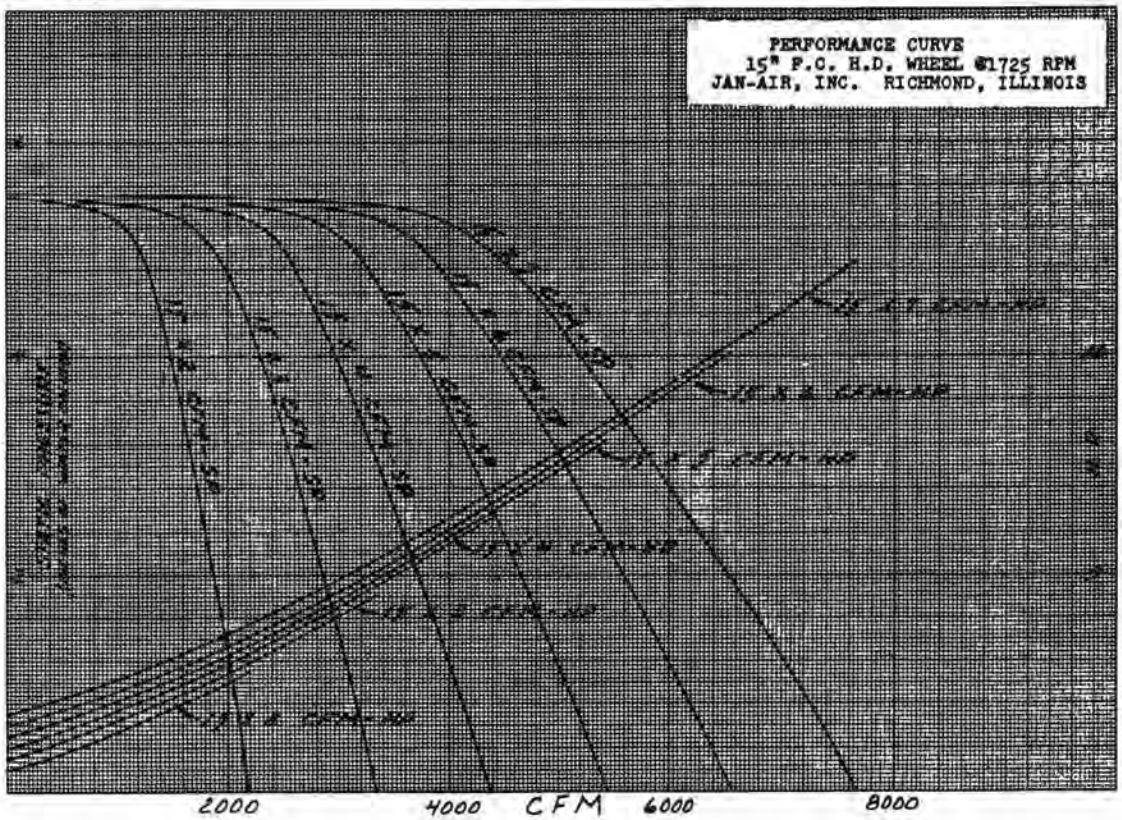

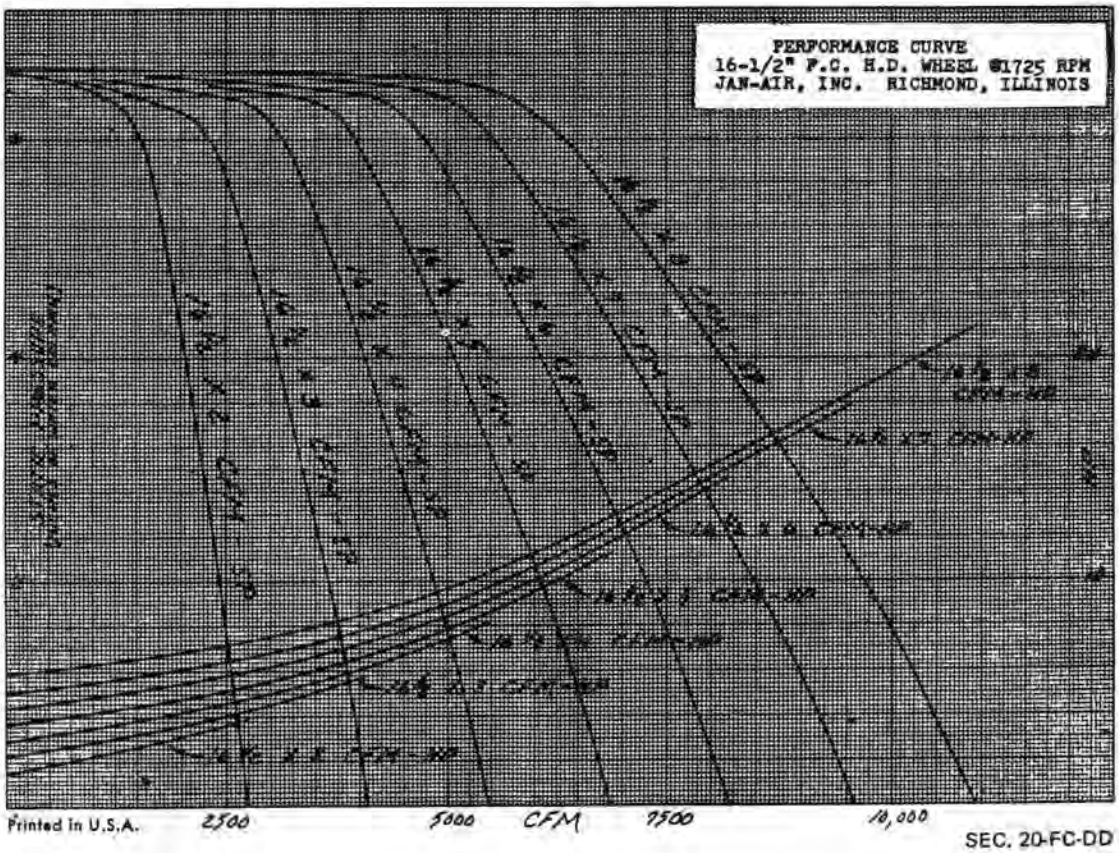

JAN-AIR, INC.

RICHMOND, ILLINOIS

PERFORMANCE DATA Type FC

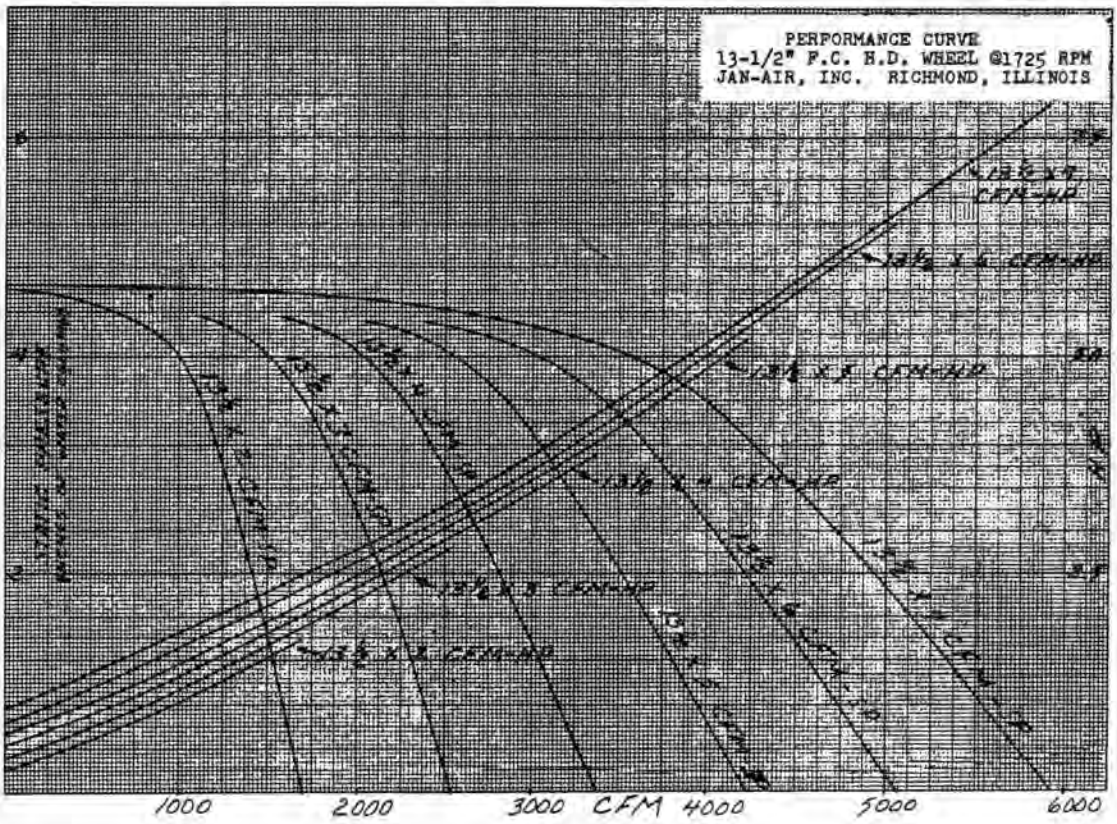

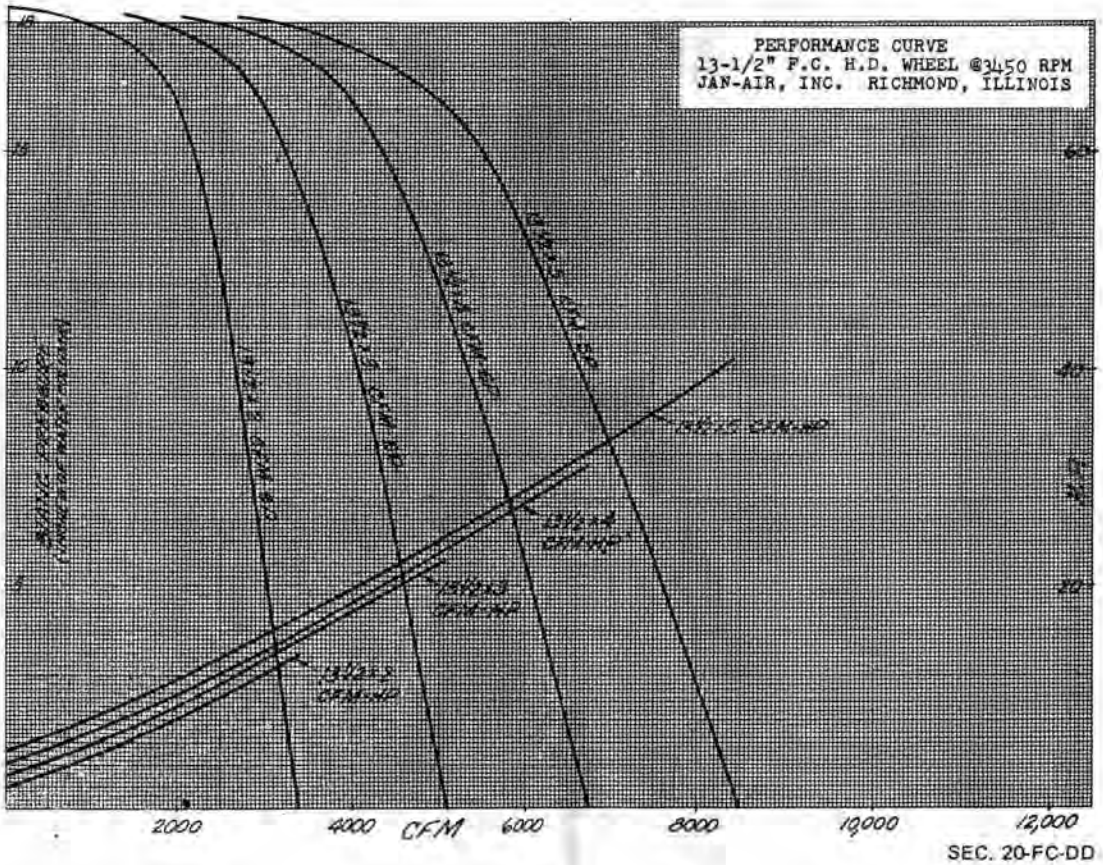

SEC. 20-FC-DD

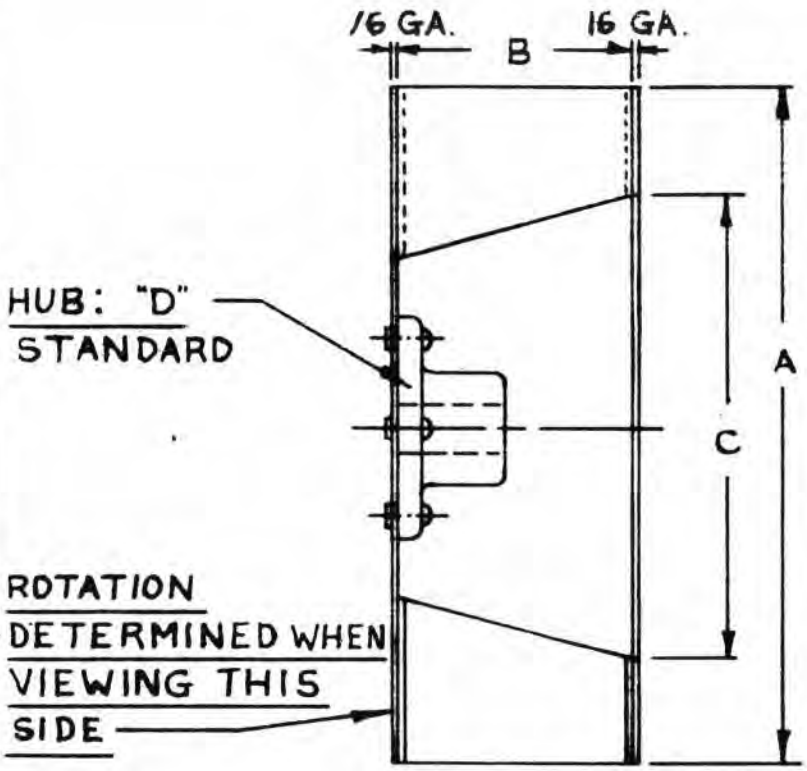

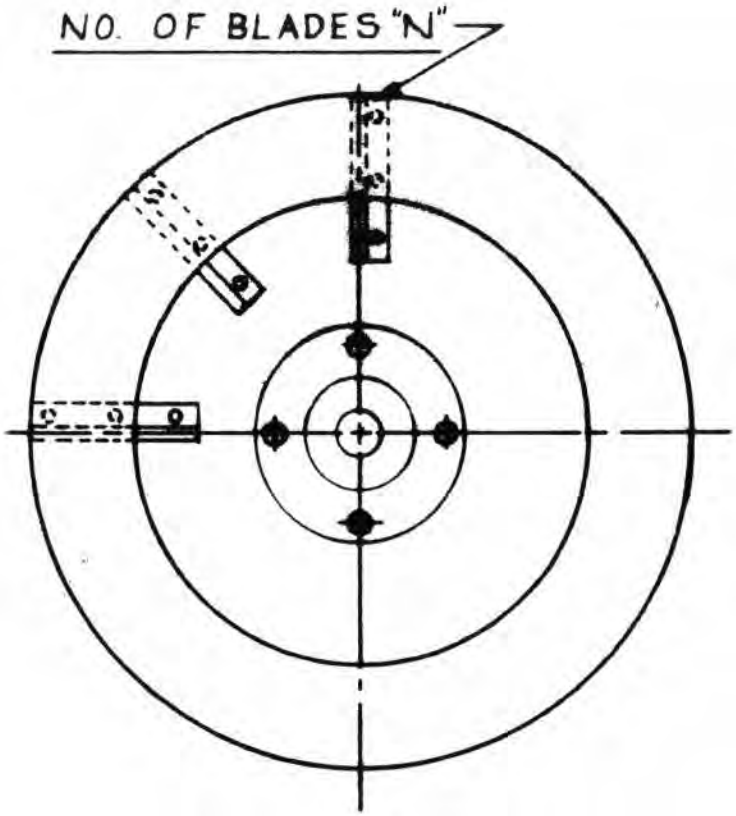

A	B	C	D	N
6 1/4	2 - 4	4 1/2	1-143	6
7 11/16	SAME AS ABOVE	4 1/8	1-143	6
8 3/8	SAME AS ABOVE	4 3/4	1-143	6
9 3/16	SAME AS ABOVE	5 1/2	2-159	8
9 15/16	SAME AS ABOVE	6 1/4	2-159	8
* 10 5/8	SAME AS ABOVE	7	2-159	12 *
12 3/16	SAME AS ABOVE	8 3/8	3-175	12
13 1/2	SAME AS ABOVE	9 15/16	3-175	12
15	SAME AS ABOVE	11 1/2	3-175	12

DIMENSIONS OF RADIAL WHEELS

STATIC BALANCE FOR 1750 R.P.M.

DYNAMIC BALANCE FOR 3450 RPM.

Janette FORWARD CURVE *Blower Wheels*

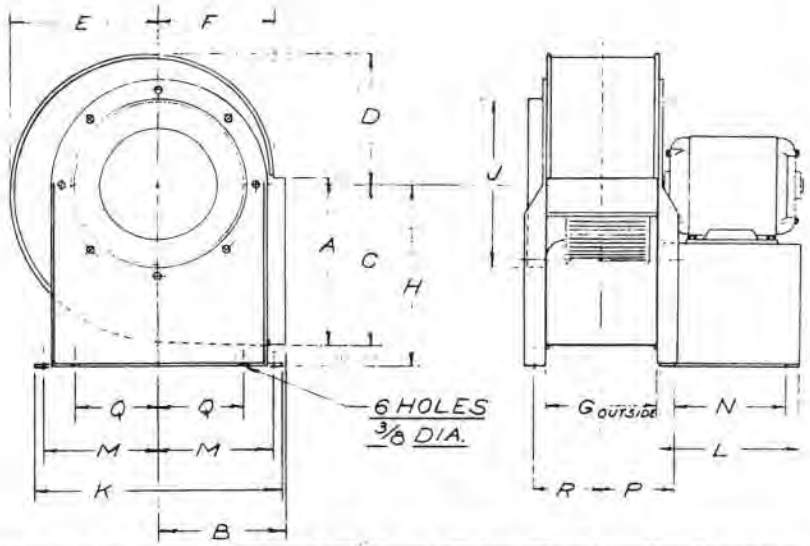

CATALOG NO.	WHEEL SIZE	HP	RPM
10-1218-60-P	12 3/16 x 6	2	1140
10-1218-60-Q		3/4	850
10-1350-65-R	13 1/2 x 6 1/2	3	1140
10-1350-65-S		1	850
10-1500-75-T	15 x 7 1/2	5	1140
10-1500-75-U		1 1/2	850

NOTE:
ALL UNITS CAN BE HAD WITH 850 THRU 1750 R.P.M. MOTORS. ALSO IN VARIES WIDTH WHEELS. CHECK PERFORMANCE CURVES FOR RATINGS

CATALOG NUMBER	A	B	C	D	E	F	G	H	J	K	L	M	N	P	Q	R
10-1218-60-	13 1/2	9	12	9 1/8	10 5/8	7 3/4	8 1/8	13 1/2	12	16	13	7 1/2	11	5 1/8	6	4 9/16
10-1350-65	15	10	14	10 3/16	11 7/8	8 5/8	8 5/8	15 1/2	15	18	17	8 3/8	14 1/2	5 3/8	6 1/2	4 15/16
10-1500-75	16 5/8	11	15 1/2	11 3/8	13 1/4	9 5/8	9 5/8	17	16 1/2	20	18 1/2	9 3/8	16	6 1/8	7 3/8	5 7/16

ARRANGEMENT 4 FORWARD CURVE BLOWER

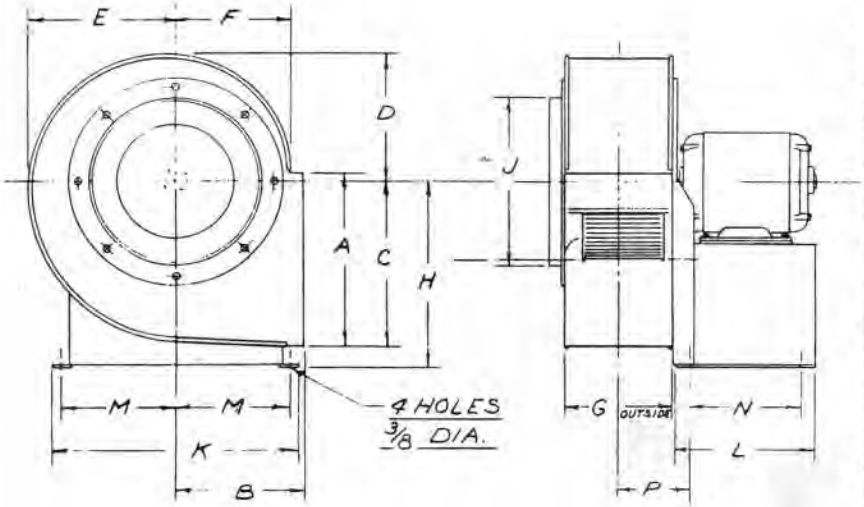

CATALOG NO.	WHEEL SIZE	HP	RPM
10-500-25-A	5 x 2 1/2	1/4	3450
10-500-25-B		1/20	1750
10-550-30-C	5 1/2 x 3	1/2	3450
10-550-30-D		1/6	1750
10-625-30-D	6 1/4 x 3	1/6	1750
10-625-30-E		1/20	1140
10-700-30-F	7 x 3	1/4	1750
10-700-30-E		1/20	1140
10-768-30-G	7 11/16 x 3	1/3	1750
10-768-30-H		1/6	1140
10-837-40-J	8 3/8 x 4	3/4	1750
10-837-40-K		1/4	1140
10-918-50-L	9 3/16 x 5	1/2	1140
10-918-50-M		1/4	850
10-993-50-N	9 15/16 x 5	3/4	1140
10-993-50-M		1/4	850
10-1062-50-N	10 5/8 x 5	3/4	1140
10-1062-50-M		1/4	850

CATALOG NUMBER	A	B	C	D	E	F	G	H	J	K	L	M	N	P
10-500-25-	5 1/4	4	5	3 3/4	4 1/2	3 1/2	3 5/8	6 1/2	4 1/2	8	8	3 5/8	6	2 7/8
10-550-30-	6	4 3/8	5 1/2	3 7/8	4 1/2	3 1/4	4 3/8	7 1/8	5	8 1/4	8	3 3/4	6	3 1/4
10-625-30-	7 1/2	5 1/2	6 5/8	4 3/4	5 1/2	4 1/16	4 3/8	8 1/8	6	9 3/4	8	4 5/16	6	3 1/4
10-700-30-	8	5 3/4	7 5/8	5 1/4	6 1/4	4 3/8	4 3/8	9 3/4	7	11 1/8	8	5 1/8	6	3 1/4
10-768-30-	8 1/2	6 1/8	7 7/8	5 13/16	6 9/16	4 3/4	4 1/2	9 3/4	7	11 1/4	8	5 1/8	6	3 5/16
10-837-40-	9	6 1/2	8 5/16	6 1/4	7 3/16	5 3/16	5 5/8	10 1/2	8	12 1/2	11	5 3/4	9	3 7/8
10-918-50-	10	7	9 1/4	6 13/16	8	5 3/4	6 5/8	10 1/2	8	12 5/8	11	5 13/16	9	4 3/8
10-993-50-	11 1/2	8	10 3/16	7 5/8	9	6 1/4	7 1/8	12 1/8	9	14	11	6 1/2	9	4 5/8
10-1062-50	12	8 1/2	10 9/16	7 13/16	9 3/8	6 7/16	7 1/8	12 5/8	9	15 3/8	11	7 7/16	9	4 5/8

NOTE:
ALL UNITS CAN BE HAD WITH 850 THRU 3450 R.P.M. MOTORS. ALSO IN VARIES WIDTH WHEELS. CHECK PERFORMANCE CURVES FOR RATINGS.

ARRANGEMENT 4 FORWARD CURVE BLOWER

JAN AIR, Inc.
RICHMOND, ILLINOIS

Janette FORWARD CURVE *Blower Wheels*

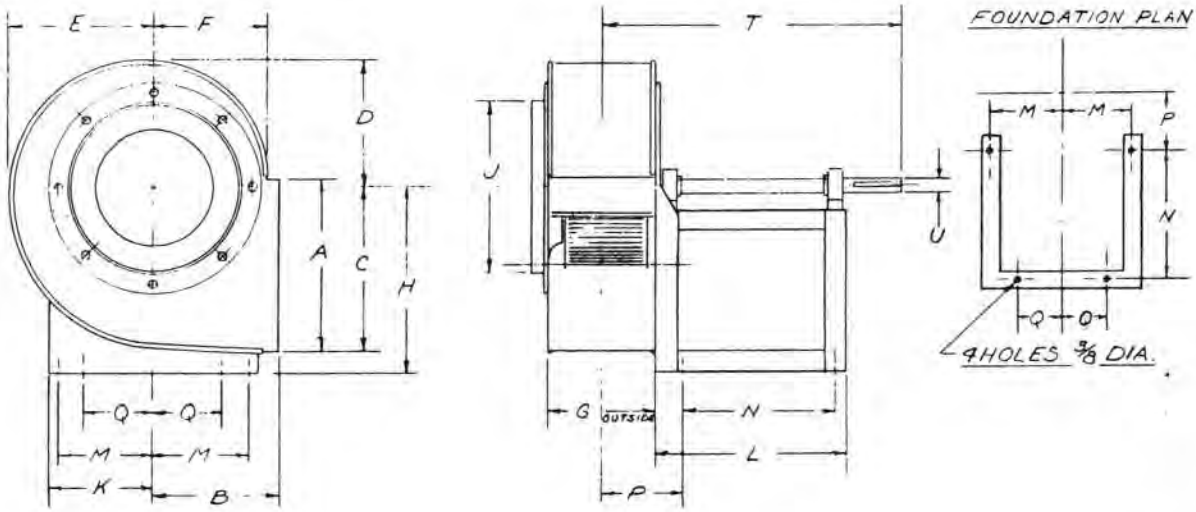

CATALOG NUMBER	WHEEL SIZE	A	B	C	D	E	F	G	H	J	K	L	M	N	P	Q	T	U	KEYWAY
10-918-50-1	9 3/16 x 5	10	7	9 1/4	6 13/16	8	5 3/4	6 5/8	10 1/2	8	5 7/16	14 1/8	4 1/2	11 5/8	5 1/8	3 3/4	20 11/16	3/4	3/16 x 3/32
10-1062-50-1	10 5/8 x 5	12	8	10 3/16	7 15/16	9 3/8	6 3/16	7 1/8	12 5/8	9	6 1/2	14 1/8	5 5/8	11 5/8	5 1/2	4 3/4	21 1/16	3/4	3/16 x 3/32
10-1218-60-10	12 3/16 x 6	13 1/2	9	12	9 1/8	10 5/8	7 3/4	8 1/8	13 1/2	12	7	14 1/8	6 1/8	11 5/8	6	5 1/4	21 5/8	1 5/16	1/4 x 1/8

ARRANGEMENT 10 FORWARD CURVE BLOWER

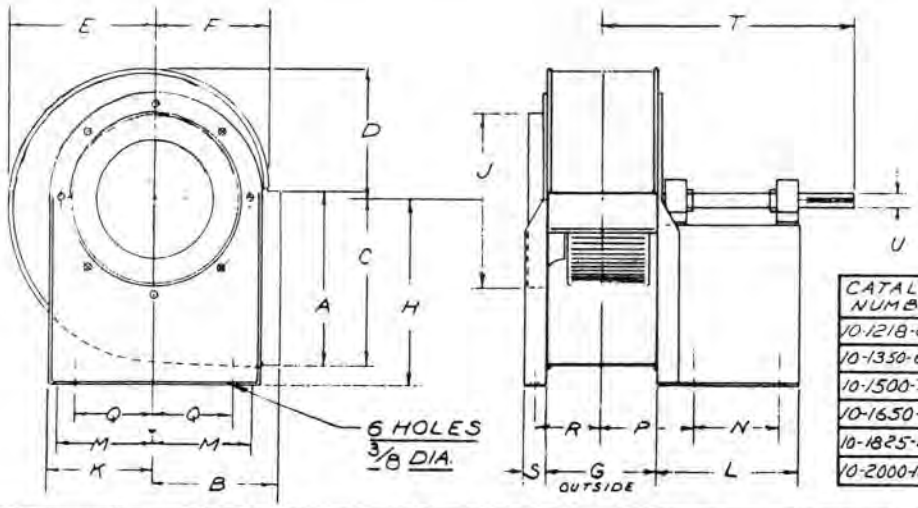

CATALOG NUMBER	U CL I	U CL II	KEYWAY CL I	KEYWAY CL II
10-1218-60-1	3/4	1 5/16	3/16 x 3/32	1/4 x 1/8
10-1350-65-1	3/4	1 5/16	3/16 x 3/32	1/4 x 1/8
10-1500-75-1	1 5/16	1 3/16	1/4 x 1/8	1/4 x 1/8
10-1650-80-1	1 5/16	1 3/16	1/4 x 1/8	1/4 x 1/8
10-1825-90-1	1 3/16	1 7/16	1/4 x 1/8	3/8 x 3/16
10-2000-100-1	1 3/16	1 7/16	1/4 x 1/8	3/8 x 3/16

CATALOG NUMBER	WHEEL SIZE	A	B	C	D	E	F	G	H	J	K	L	M	N	P	Q	R	S	T
10-1218-60-1	12 3/16 x 6	13 1/2	9	12	9 1/8	10 5/8	7 3/4	8 1/8	13 1/2	12	7	10	6 1/2	7	6 11/16	6	4 11/16	1 5/16	14 7/8
10-1350-65-1	13 1/2 x 6 1/2	15 1/8	10	14	10 3/16	11 3/8	8 7/8	10 1/8	15 1/2	13 1/2	7 7/8	10	7 3/8	7	7 1/16	6 1/2	5 1/16	1 1/16	15 7/8
10-1500-75-1	15 x 7 1/2	16 7/8	11	15 1/2	11 3/8	13 1/4	9 5/8	11 1/8	17	15	8 7/8	12	8 1/4	8 1/4	8 1/16	7 1/2	6 5/16	1 1/4	21 3/8
10-1650-80-1	16 1/2 x 8	18 5/8	12 1/2	17	12 1/2	14 1/2	10 5/8	12 3/8	18 1/2	16 1/2	9 5/8	12	9	8 1/4	8 11/16	8	6 13/16	1 1/4	22 3/16
10-1825-90-1	18 1/4 x 9	20 1/2	13 1/2	18 7/8	13 7/8	16 1/16	11 3/4	14 1/2	20 1/2	18	10 5/8	14	9 2/3	9 1/2	10 1/4	9	8 1/8	1 1/2	25 1/2
10-2000-100-1	20 x 10	22 1/2	15	20 3/4	15 1/8	17 5/8	12 3/8	15	22 1/2	20'	11 1/2	14	10 3/4	9 1/2	10 1/2	10	8 3/8	1 1/2	25 1/2

ARRANGEMENT 1 FORWARD CURVE BLOWER

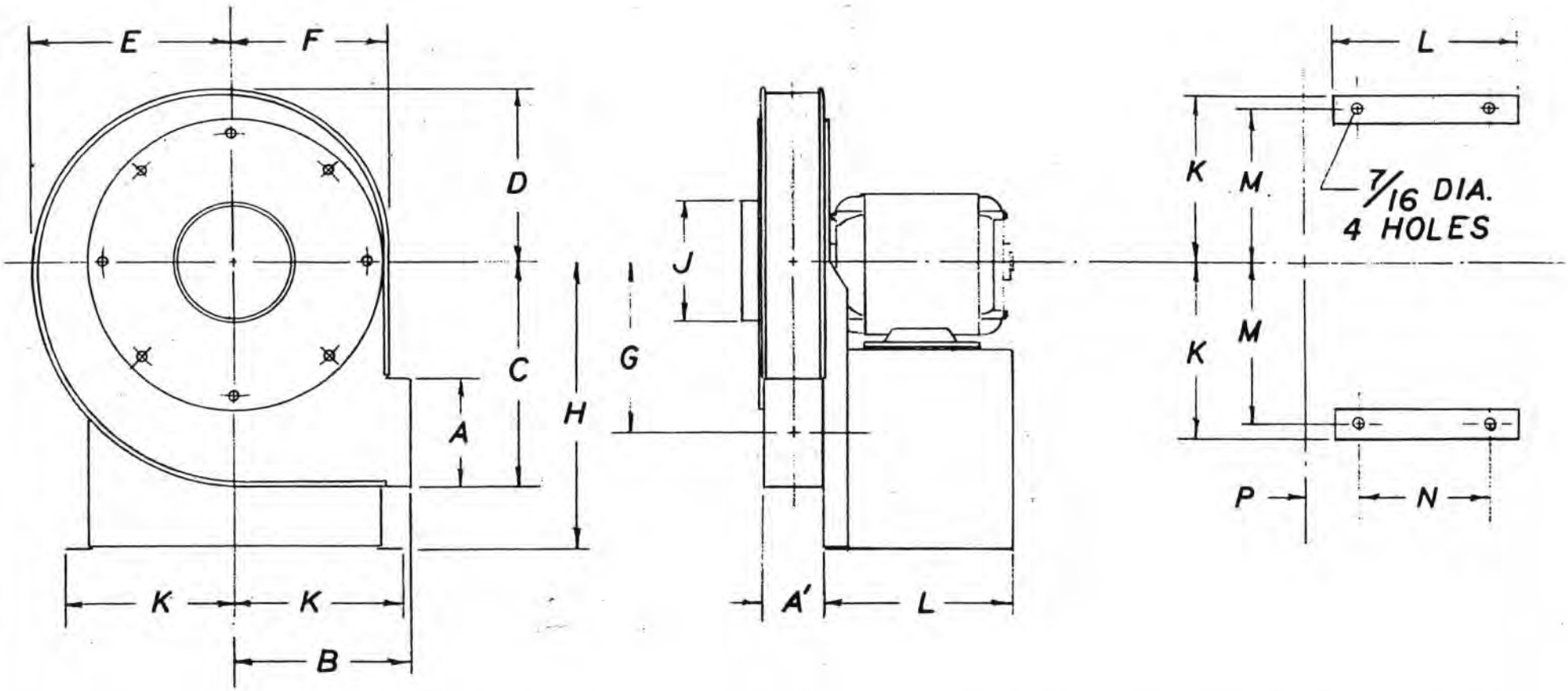

CATALOG NUMBER	WHEEL DIM.	MAX. HP.	A	A'	B	C	D	E	F	G	H	J	K	L	M	N	P
12-768-25	7 11/16 x 2 1/2	1/3	3 3/8	3 1/2	5 7/8	6 9/16	5 3/16	5 3/4	4 3/4	4 7/8	9 3/4	4	5 5/8	8	5 1/8	6	2 13/16
12-918-25	9 3/16 x 2 1/2	3/4	3 3/4	3 1/2	6 3/8	7 7/16	6	6 3/4	5 3/8	5 1/16	10 1/2	5	6 5/16	11	5 13/16	9	2 13/16
12-1062-30	10 5/8 x 3	1 1/2	4	4	7 5/8	9 1/16	7 1/2	8 5/16	6 11/16	7 1/16	12 1/2	6	7 7/16	11	6 13/16	9	3 1/16
12-1218-25	12 3/16 x 2 1/2	3	5	3 1/2	9	10	8 1/4	8 1/2	7 3/4	7 1/2	12 1/4	7	7 15/16	11 1/4	7 7/16	9 1/4	2 13/16

PRESSURE BLOWER ARR. 4

Form 14

JAN-AIR, INC.
RICHMOND, ILLINOIS

DRAWN CURT DATE 4/6/65

SCALE NONE MAT.

DWG. NO. 12-15-100-1

JAN AIR, Inc.
RICHMOND, ILLINOIS

Janette FORWARD CURVE *Blower Wheels*

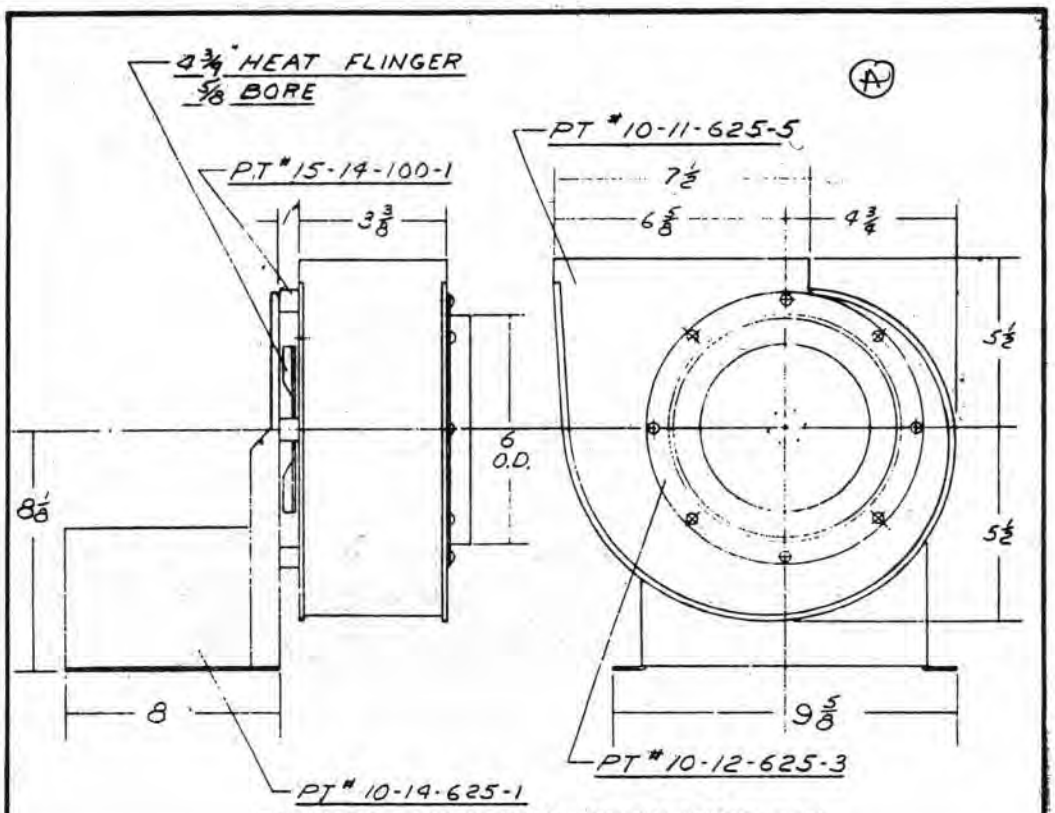

FORWARD CURVE OVEN CIRCULATING FAN

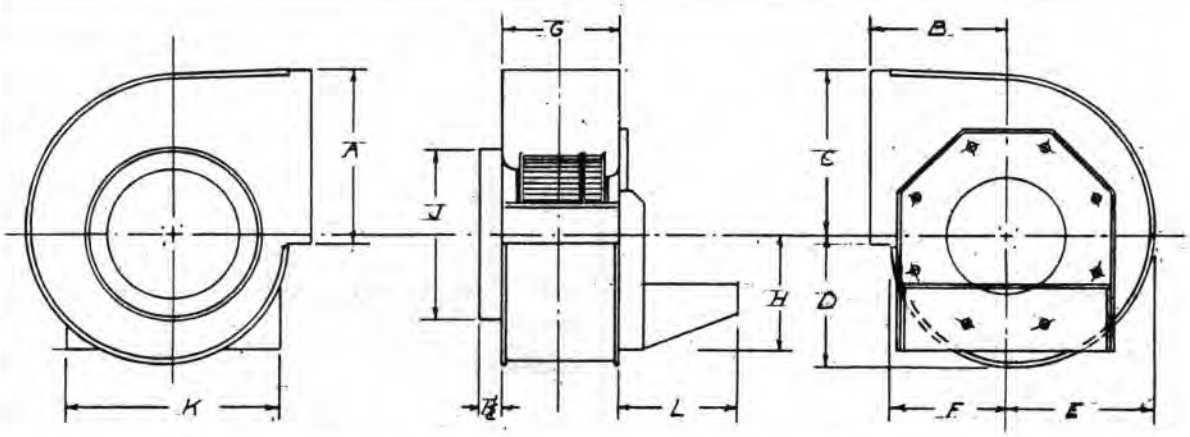

GENERAL DIMENSIONS OF SPECIAL ARR. 4 FORWARD CURVE

UNIT SIZE	A	B	C	D	E	F	G	H	J	K	L	CATALOG NUMBER
NO. I.D. 55	6	4 3/8	5 1/2	3 1/8	4 1/2	3 1/4	5	5	5	7	6 5/16	10-550-30x10
NO. I.D. 75	8 1/2	6 1/8	7 7/8	5 13/16	6 9/16	4 3/4	6 1/2	5 1/2	8	9 1/2	7 1/16	10-768-35x10
NO. I.D. 90	10	7	9 1/4	6 13/16	8	5 3/4	7 1/2	6	9	11	7 1/16	10-918-45x10
NO. I.D. 105	12	8 1/2	10 5/16	7 13/16	9 3/8	6 7/16	8 1/2	6 1/2	10	12 3/4	7 1/16	10-1062-50x10
NO. I.D. 122	13 1/2	9	12	9 1/8	10 5/8	7 3/4	9 1/2	7 3/4	12	14	10 1/8	10-1218-60x10

INDUCTED DRAFT BLOWER

Janette FORWARD CURVE *Blower Wheels*

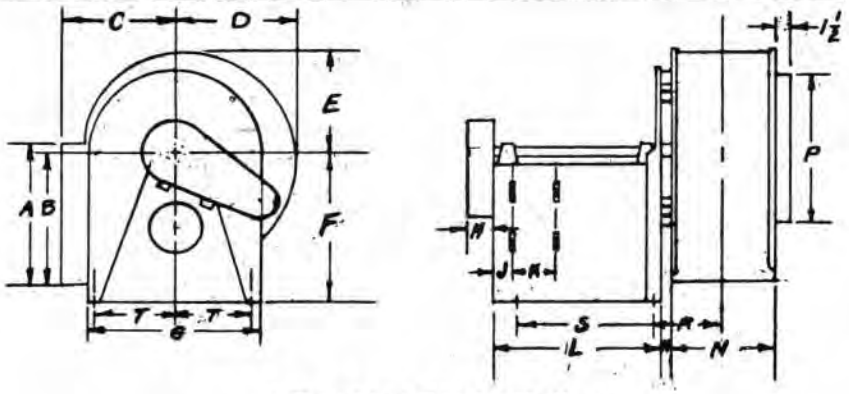

ARRANGEMENT # 9

WHEEL SIZE	A	B	C	D	E	F	G	H	J	K	L	M	N	P	R	S	T
12¾ X 6 NO HEAT SLINGER	13¼	12¼	9	10⅝	9⅛	15	14¼	2	2¾	3	12	0	8⅛	12	4⅝	10	6⅝
12¾ X 6 WITH HEAT SLINGER	13¼	12¼	9	10⅝	9⅛	15	14¼	2	2¾	3	12	1⅜	8⅛	12	6	10	6⅝
15 X 7½ NO HEAT SLINGER	16⅛	16½	14½	14	12 1/16	19¼	17	2	2¾	3	12	0	10⅛	15	5⅝	10	8
15 X 7½ WITH HEAT SLINGER	16⅛	16½	14½	14	12 1/16	19¼	17	2	2¾	3	12	1⅜	10⅛	15	7	10	8

HIGH TEMPERATURE OVEN CIRCULATING FAN

JAN-AIR, INC.
RICHMOND, ILL.
5-2-60 JTJ

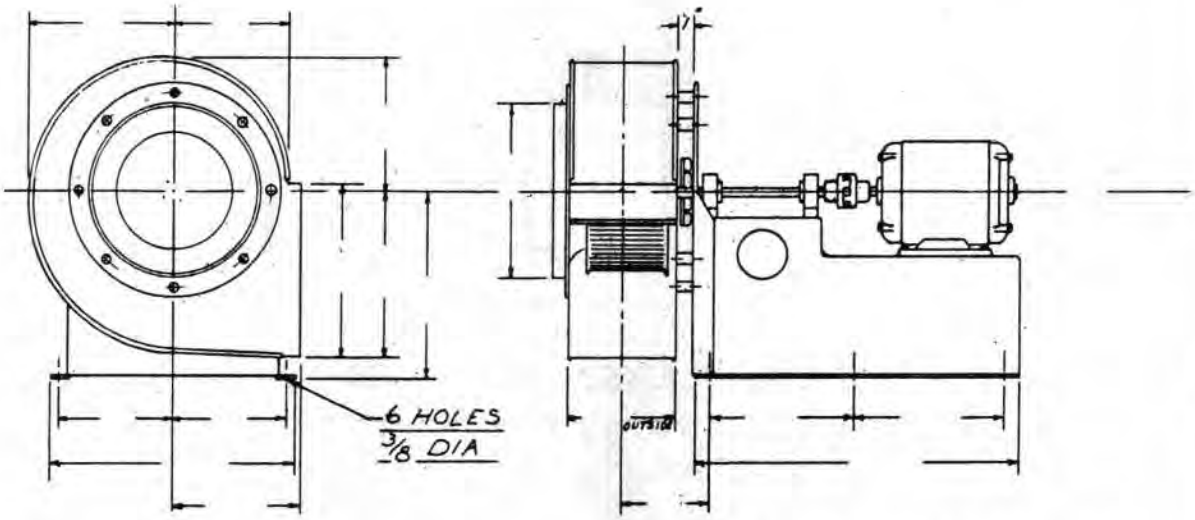

ARR. 8 FORWARD CURVE BLOWER
WITH HEAT SLINGER & SPACERS

CONTINUOUS DUTY EXHAUSTER FOR HEAT TREAT OVENS

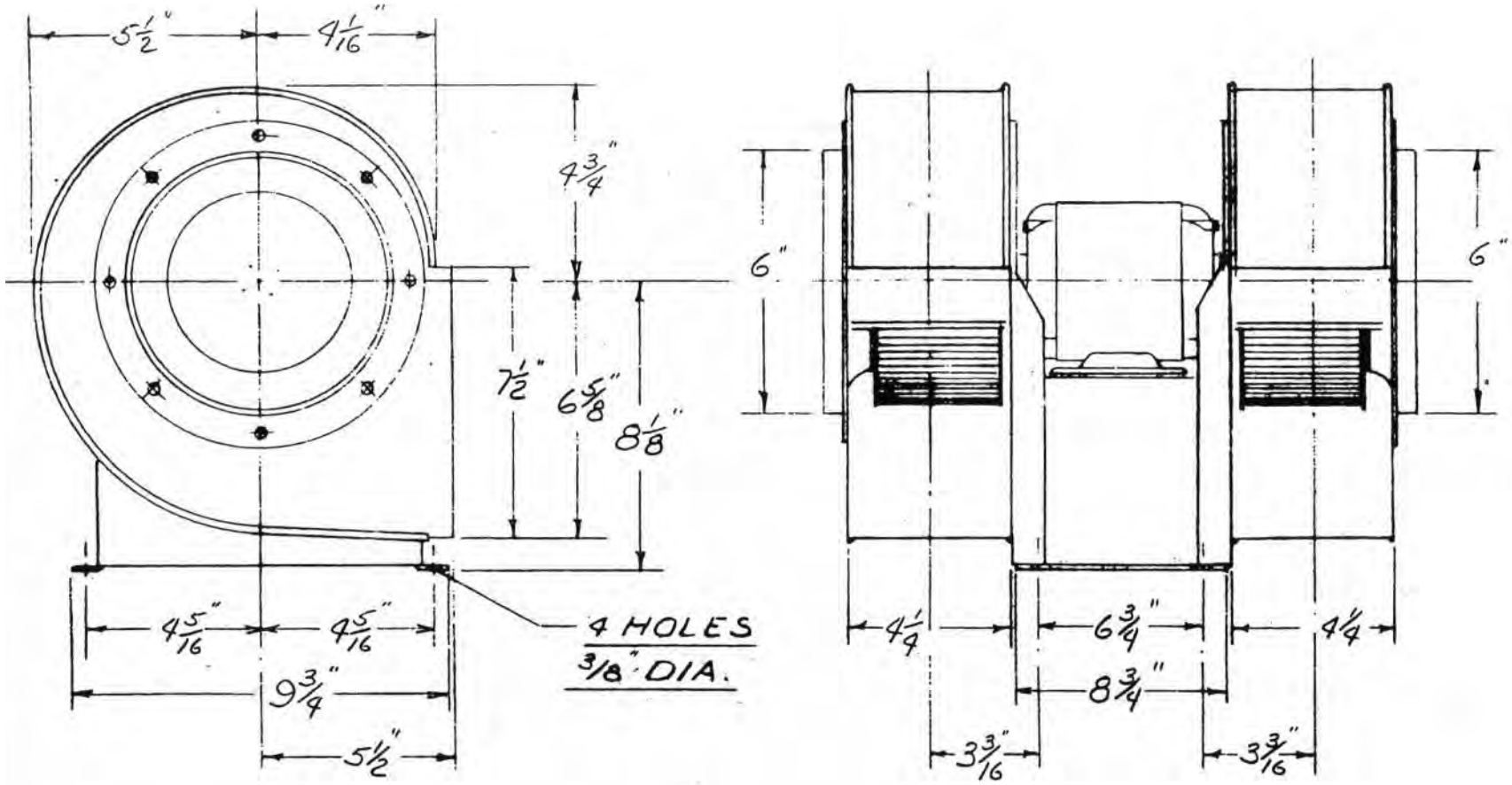

SPECIAL TWIN ARR. 4 FORWARD CURVE BLOWER
CATALOG NO. T-10-625-3-G WHEEL SIZE - 6 1/4 x 3
1/3 HP 1725 RPM 48 FR MOTOR

Form 15

JAN-AIR, INC.
RICHMOND, ILLINOIS

DRAWN CURT DATE 3/19/65
SCALE NONE MAT. STEEL.
DWG. NO. 10-15-625-4

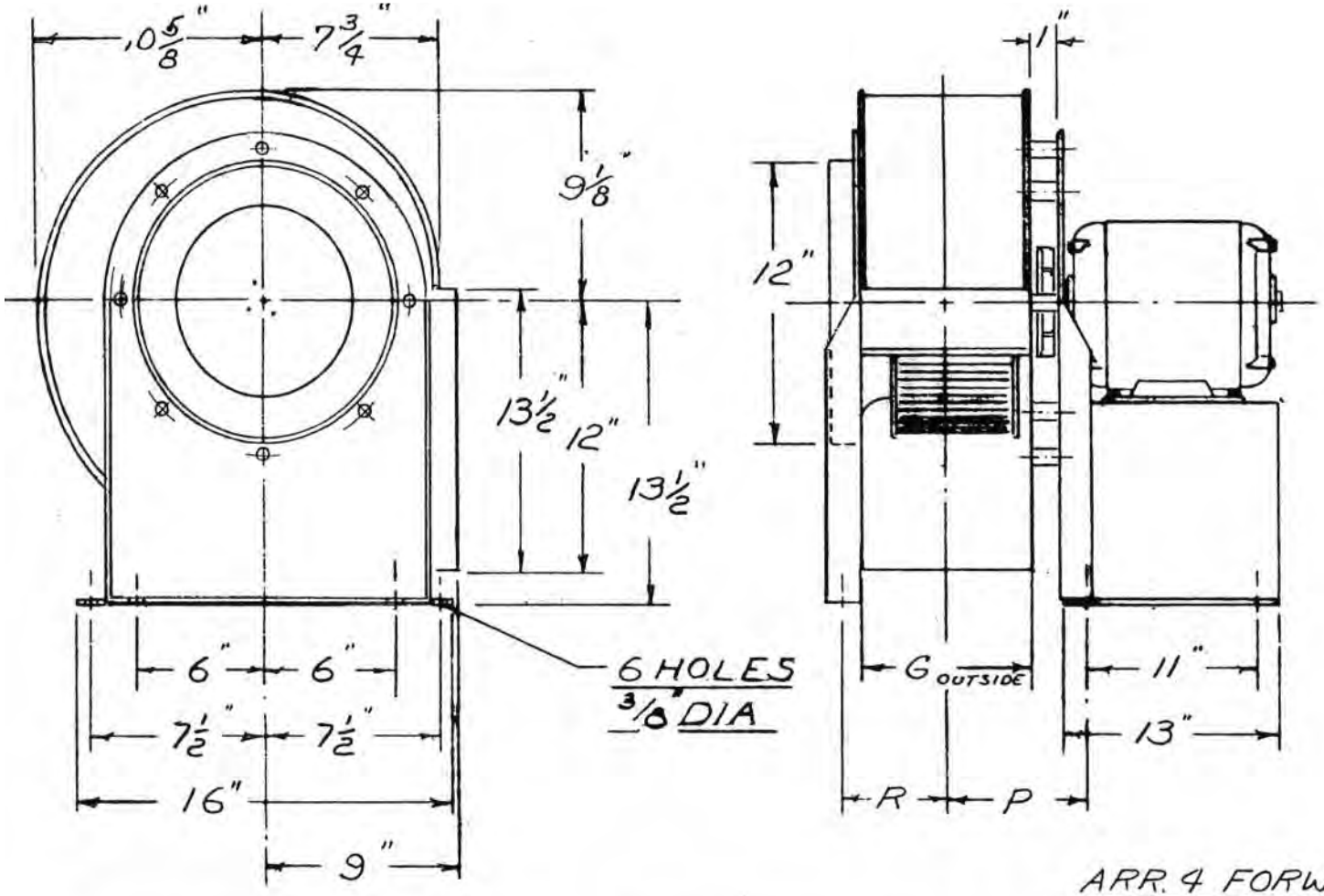

ARR. 4 FORWARD CURVE BLOWER
WITH HEAT SLINGER & SPACERS

WHEEL SIZE	G	P	R
12 3/16 x 1	3	3 9/16	2 1/16
12 3/16 x 1 1/2	3 1/2	3 13/16	2 5/16
12 3/16 x 2	4	4 1/16	2 9/16
12 3/16 x 2 1/2	4 1/2	4 5/16	2 13/16
12 3/16 x 3	5	4 9/16	3 1/16
12 3/16 x 3 1/2	5 1/2	4 13/16	3 5/16

WHEEL SIZE	G	P	R
12 3/16 x 4	6	5 1/16	3 9/16
12 3/16 x 4 1/2	6 1/2	5 5/16	3 13/16
12 3/16 x 5	7	5 9/16	4 1/16
12 3/16 x 5 1/2	7 1/2	5 13/16	4 5/16
12 3/16 x 6	8	6 1/16	4 9/16

JAN-AIR, INC.
RICHMOND, ILLINOIS

DRAWN CURT DATE 6/16/65

SCALE NONE MAT. STEEL

10-15-1218-1

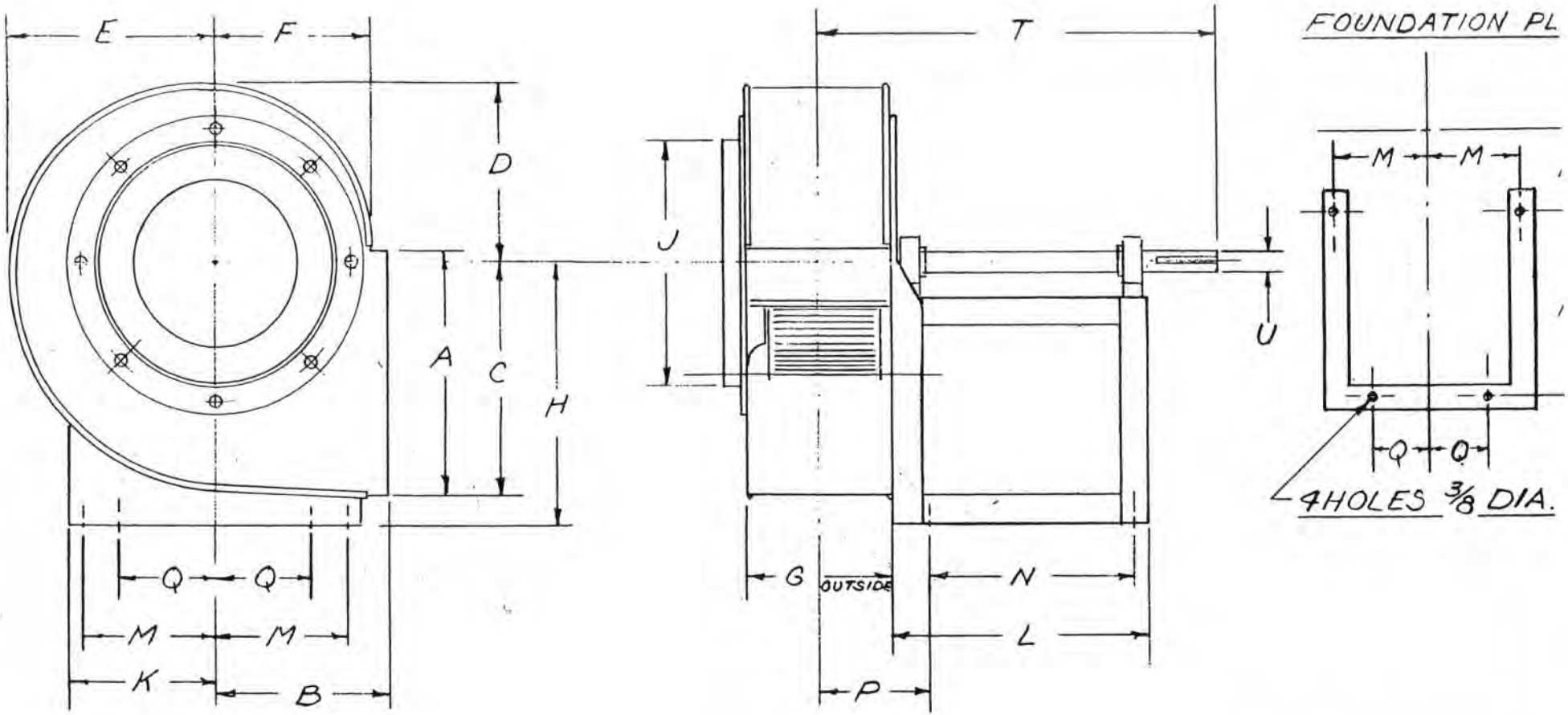

CATALOG NUMBER	WHEEL SIZE	A	B	C	D	E	F	G	H	J	K	L	M	N	P	Q	T	U	KEYW
10-918-50-1	9 3/16 x 5	10	7	9 1/4	6 13/16	8	5 3/4	6 5/8	10 1/2	8	5 7/16	14 1/8	4 1/2	11 5/8	5 1/8	3 3/4	20 11/16	3/4	3/16 x 3/16
10-1062-50-1	10 5/8 x 5	12	8	10 3/16	7 15/16	9 3/8	6 7/16	7 1/8	12 5/8	9	6 1/2	14 1/8	5 5/8	11 5/8	5 1/2	4 3/4	21 1/16	3/4	3/16 x 3/16
10-1218-60-10	12 3/16 x 6	13 1/2	9	12	9 1/8	10 5/8	7 3/4	8 1/8	13 1/2	12	7	14 1/8	6 1/8	11 5/8	6	5 1/4	21 5/8	15/16	1/4 x 1/4

JAN-AIR, INC.
RICHMOND, ILLINOIS

DRAWN CURT DATE 10/2/16

SCALE NONE MAT. STEEL

Form 13

ARRANGEMENT 10 FORWARD CURVE BLOWER

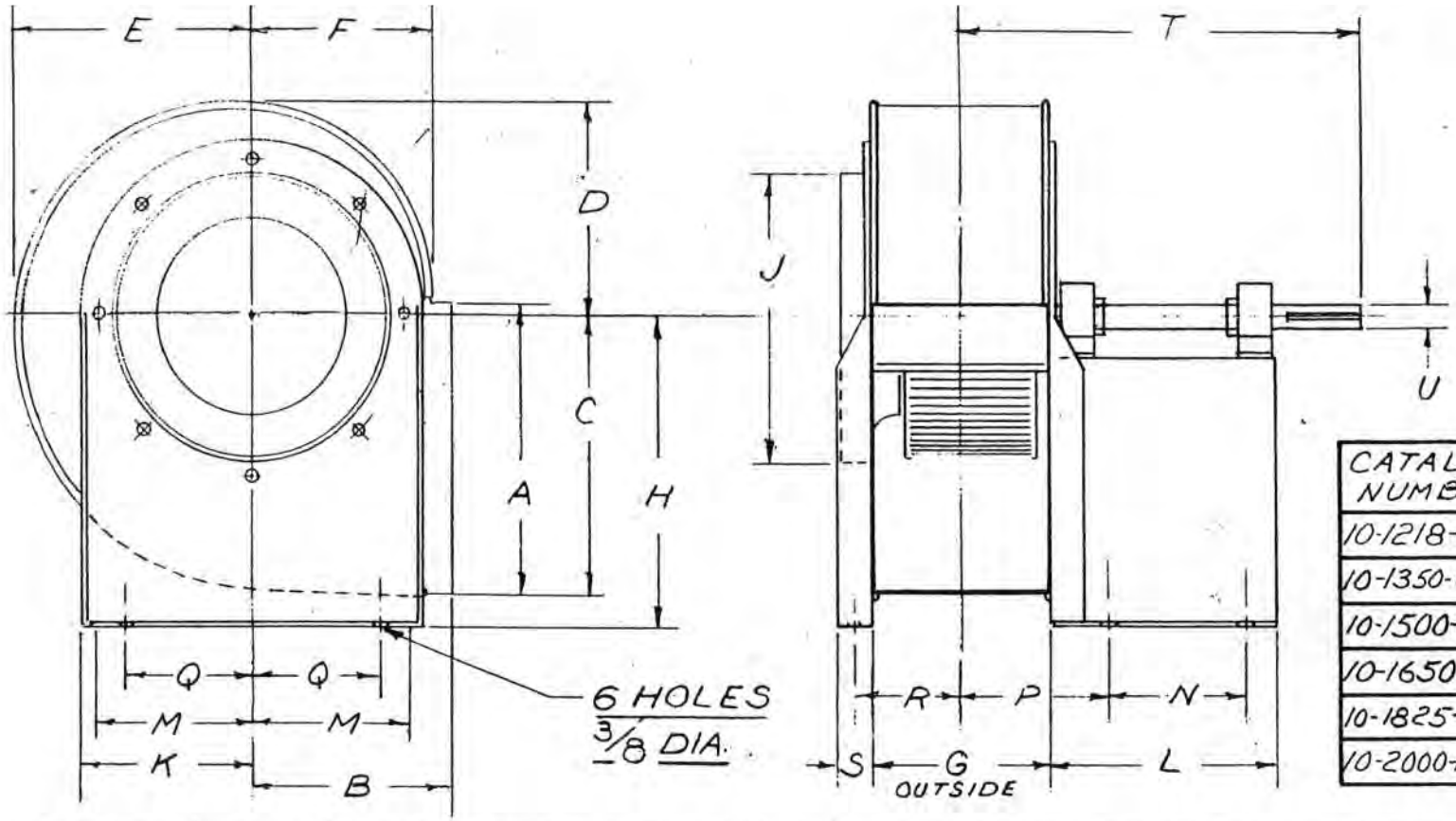

CATALOG NUMBER	U CL I	U CL II	KEYWAY CL I	KEYWAY CL II
10-1218-60-1	3/4	15/16	3/16 x 3/32	1/4 x 1/8
10-1350-65-1	3/4	15/16	3/16 x 3/32	1/4 x 1/8
10-1500-75-1	15/16	1 3/16	1/4 x 1/8	1/4 x 1/8
10-1650-80-1	15/16	1 3/16	1/4 x 1/8	1/4 x 1/8
10-1825-90-1	1 3/16	1 7/16	1/4 x 1/8	3/8 x 3/16
10-2000-100-1	1 3/16	1 7/16	1/4 x 1/8	3/8 x 3/16

CATALOG NUMBER	WHEEL SIZE	A	B	C	D	E	F	G	H	J	K	L	M	N	P	Q	R	S	T
10-1218-60-1	12 3/16 x 6	13 1/2	9	12	9 1/8	10 5/8	7 3/4	8 1/8	13 1/2	12	7	10	6 1/2	7	6 1/16	6	4 11/16	1 1/16	14 1/16
10-1350-65-1	13 1/2 x 6 1/2	15 1/8	10	14	10 3/16	11 7/8	8 5/8	10 1/8	15 1/2	13 1/2	7 7/8	10	7 3/8	7	7 1/16	6 1/2	5 11/16	1 1/16	15 1/16
10-1500-75-1	15 x 7 1/2	16 7/8	11	15 1/2	11 3/8	13 1/4	9 5/8	11 1/8	17	15	8 7/8	12	8 1/4	8 1/4	8 1/16	7 1/2	6 5/16	1 1/4	21 9/16
10-1650-80-1	16 1/2 x 8	18 5/8	12 1/2	17	12 1/2	14 1/2	10 5/8	12 3/8	18 1/2	16 1/2	9 5/8	12	9	8 1/4	8 11/16	8	6 15/16	1 1/4	22 3/16
10-1825-90-1	18 1/4 x 9	20 1/2	13 1/2	18 7/8	13 13/16	16 1/16	11 3/4	14 1/2	20 1/2	18	10 5/8	14	9 7/8	9 1/2	10 1/4	9	8 1/8	1 1/2	25 1/2
10-2000-100-1	20 x 10	22 1/2	15	20 3/4	15 1/8	17 5/8	12 7/8	15	22 1/2	20	11 1/2	14	10 3/4	9 1/2	10 1/2	10	8 3/8	1 1/2	25 1/2

ARRANGEMENT 1 FORWARD CURVE BLOWER

JAN-AIR, INC.
RICHMOND, ILLINOIS

DRAWN CURT DATE 1/16/69

DWG. NO. 10-15-100-4

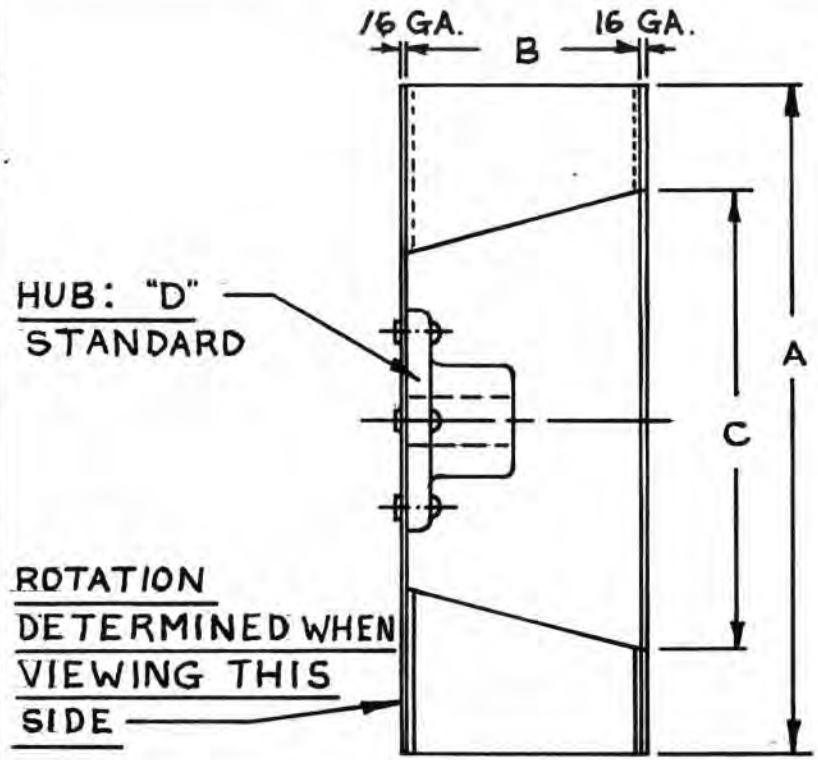

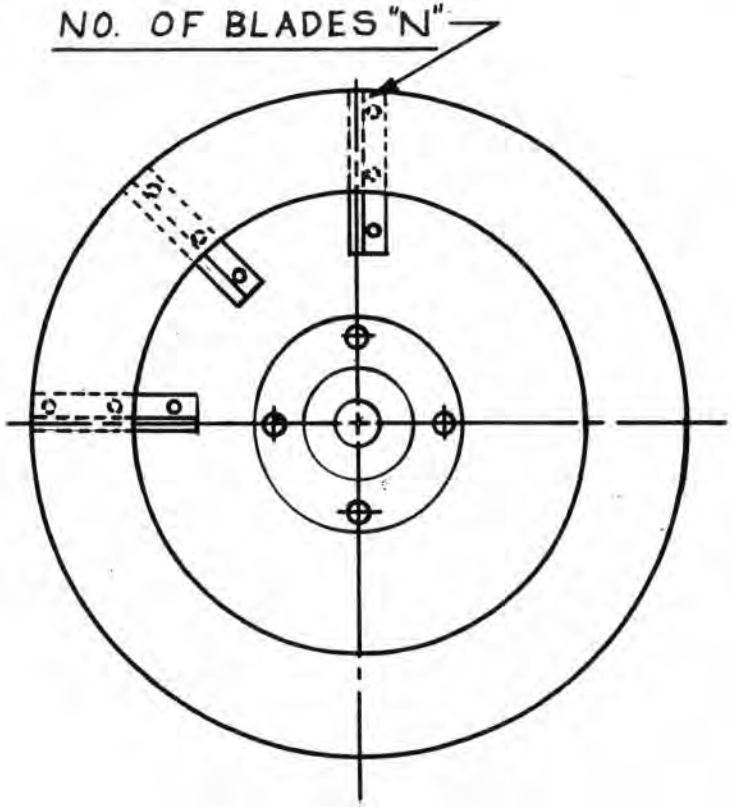

A	B	C	D	N
6 1/4	2 - 4	4 1/2	1-143	6
7 11/16	SAME AS ABOVE	4 1/8	1-143	6
8 3/8	SAME AS ABOVE	4 3/4	1-143	6
9 3/16	SAME AS ABOVE	5 1/2	2-159	8
9 15/16	SAME AS ABOVE	6 1/4	2-159	8
10 5/8	SAME AS ABOVE	7	2-159	12
12 3/16	SAME AS ABOVE	8 3/8	3-175	12
13 1/2	SAME AS ABOVE	9 15/16	3-175	12
15	SAME AS ABOVE	11 1/2	3-175	12

DIMENSIONS OF RADIAL WHEELS

STATIC BALANCE FOR 1750 R.P.M.

DYNAMIC BALANCE FOR 3450 R.P.M.

JAN-AIR, Inc.

RICHMOND, ILL. 60071

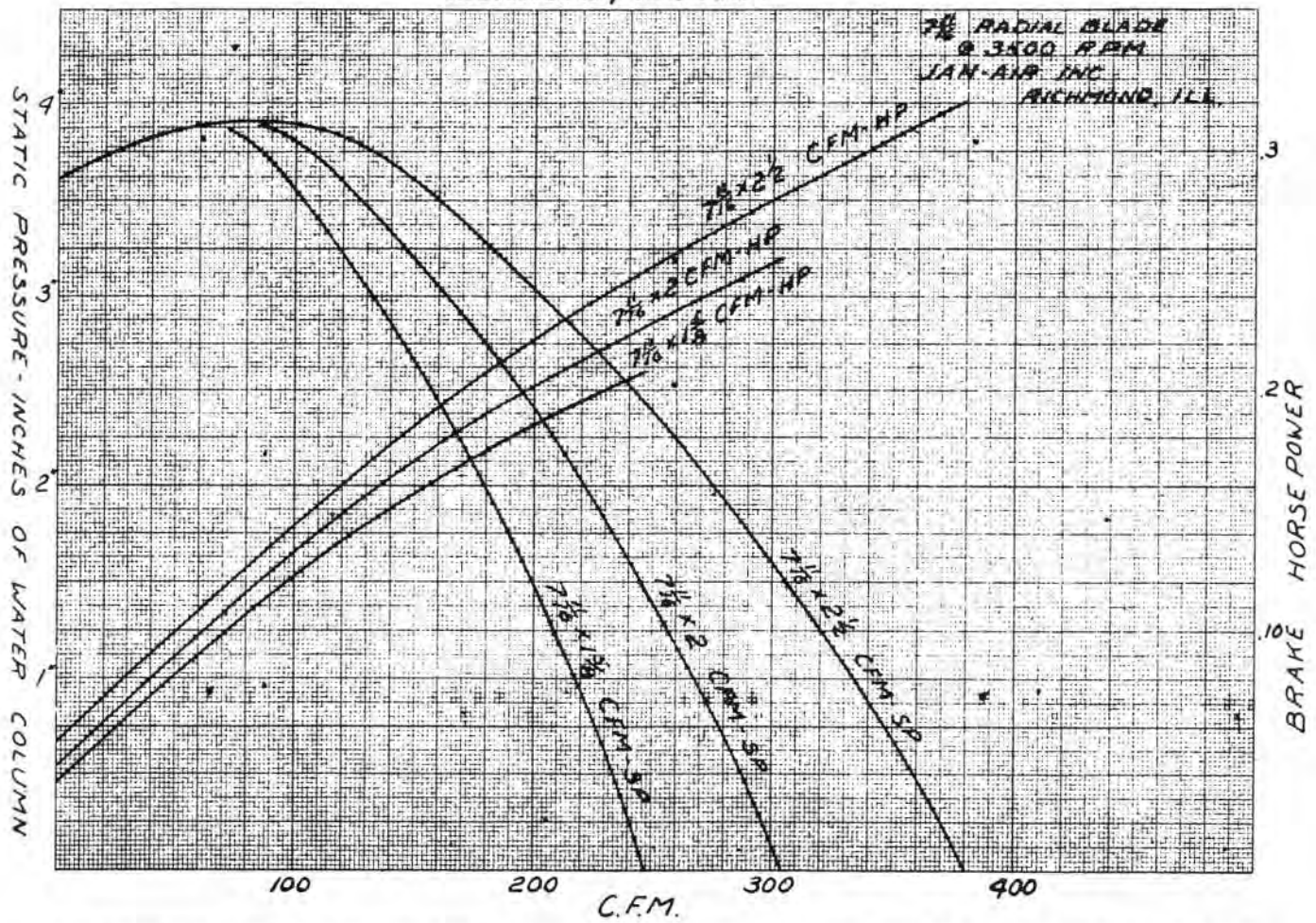

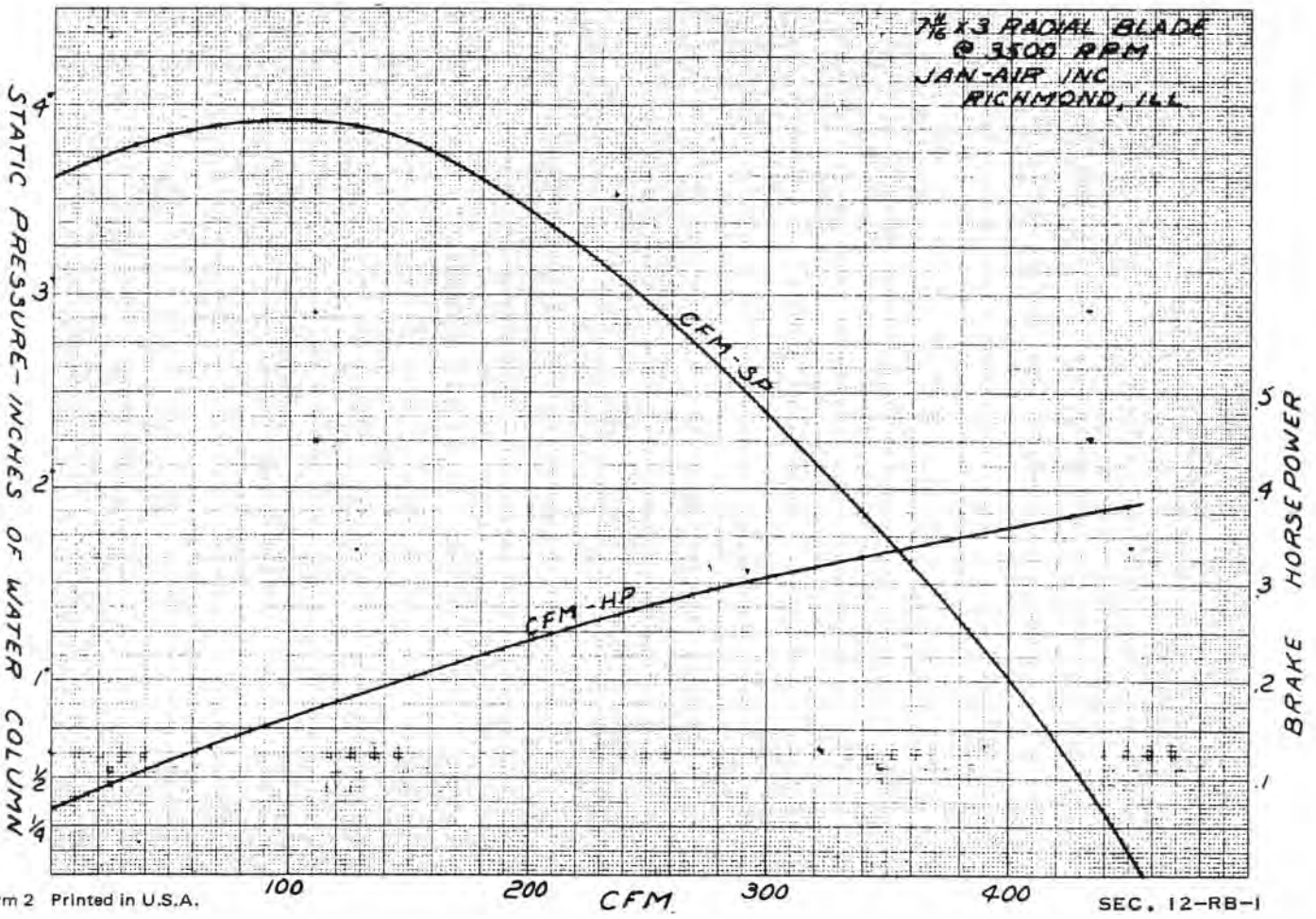

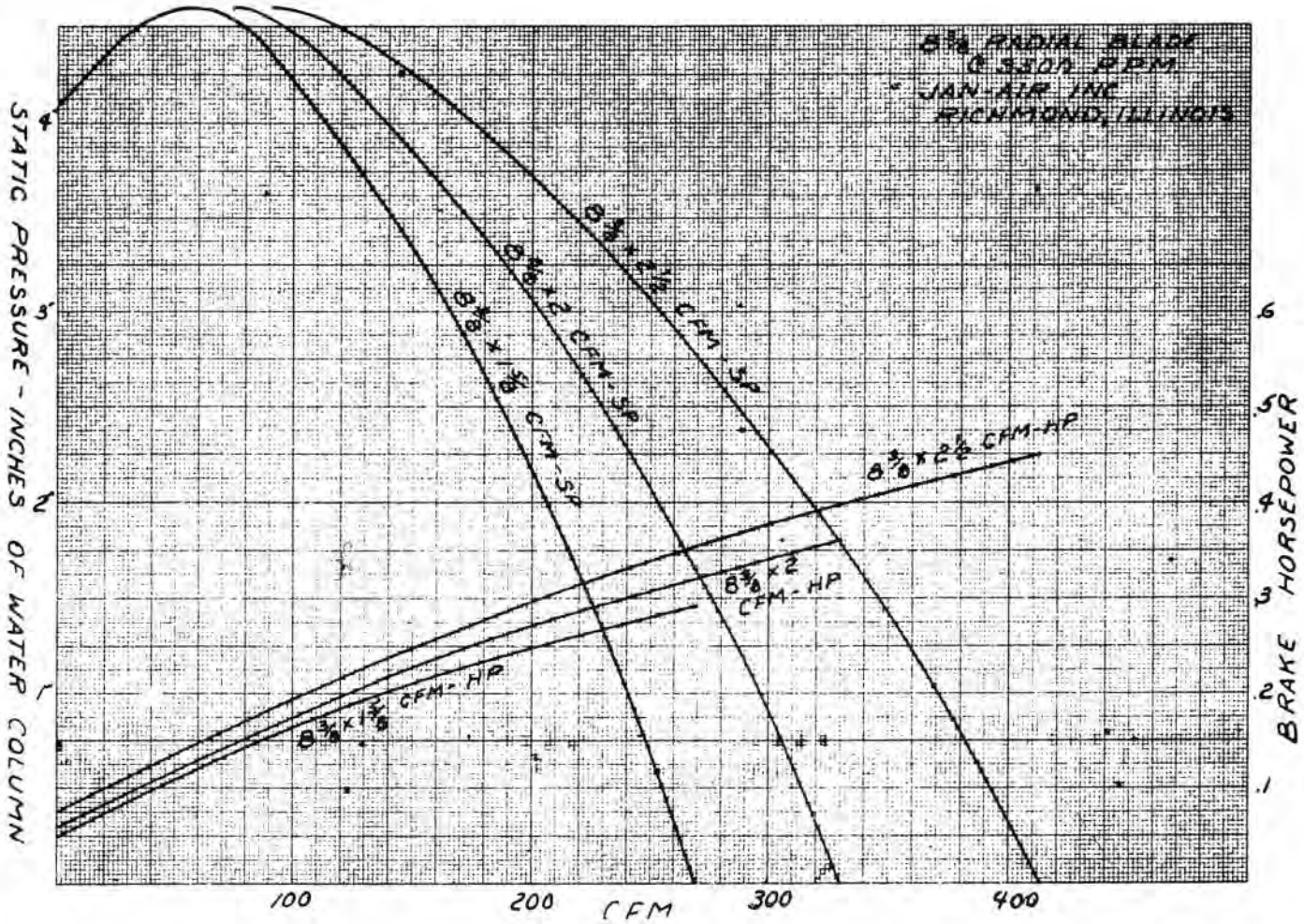
8 3/8 RADIAL BLADE
@ 3500 RPM
JAN-AIR INC
RICHMOND, ILLINOIS
8 3/8 x 2 1/8 CFM-SP
8 3/8 x 2 CFM-SP
8 3/8 x 1 3/4 CFM-SP
8 3/8 x 2 1/8 CFM-HP
8 3/8 x 2 CFM-HP
8 3/8 x 1 3/4 CFM-HP
STATIC PRESSURE - INCHES OF WATER COLUMN
BRAKE HORSEPOWER
CFM
100
200
300
400
1
2
3
4
.1
.2
.3
.4
.5
.6

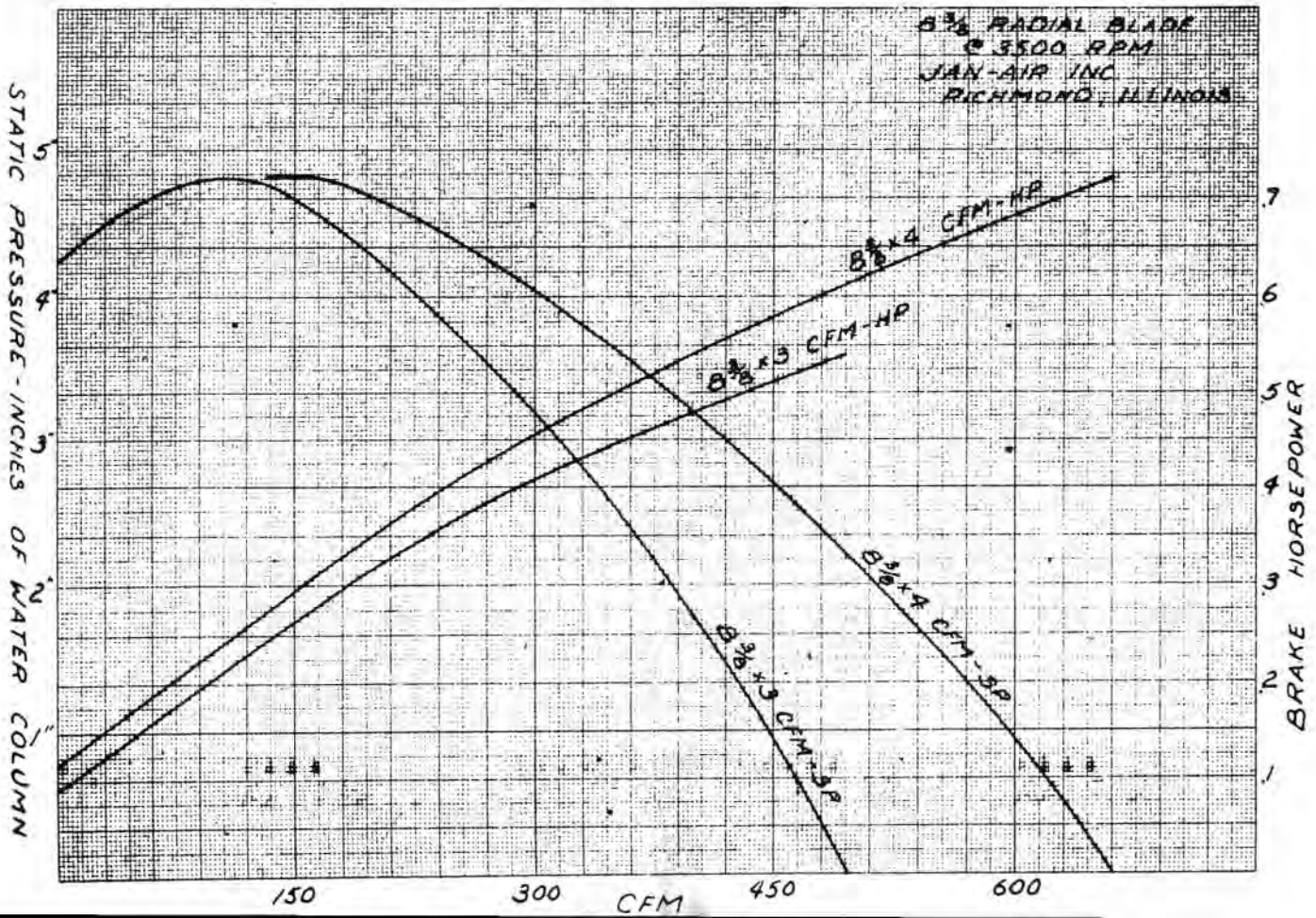
8 3/8 RADIAL BLADE
@ 3500 RPM
JAN-AIR INC
RICHMOND, ILLINOIS
8 3/8 x 4 CFM-HP
8 3/8 x 3 CFM-HP
8 3/8 x 4 CFM-SP
8 3/8 x 3 CFM-SP
STATIC PRESSURE - INCHES OF WATER COLUMN
BRAKE HORSEPOWER
CFM
150
300
450
600
1
2
3
4
5
.1
.2
.3
.4
.5
.6
.7

JAN-AIR, inc.

RICHMOND, ILL. 60071

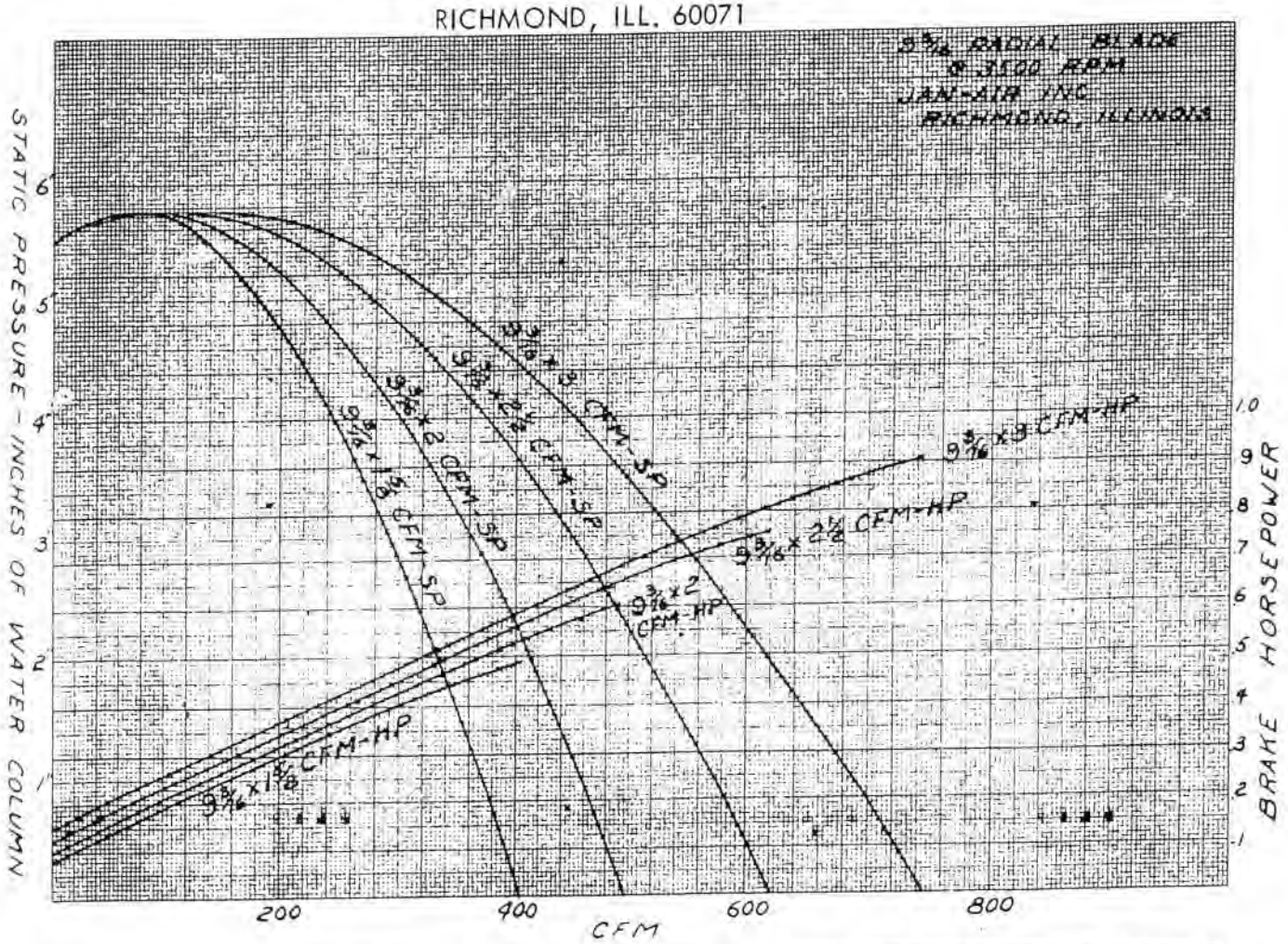

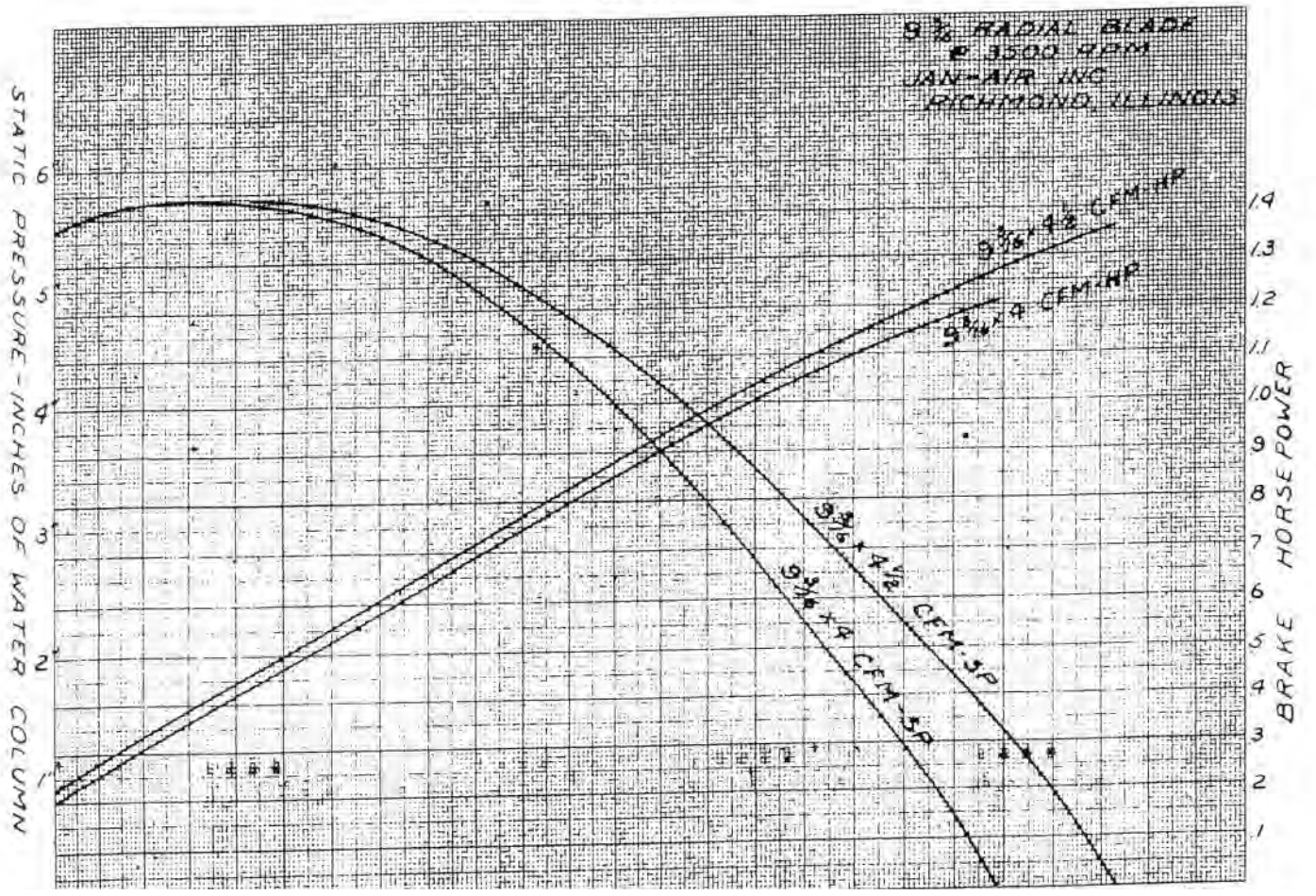

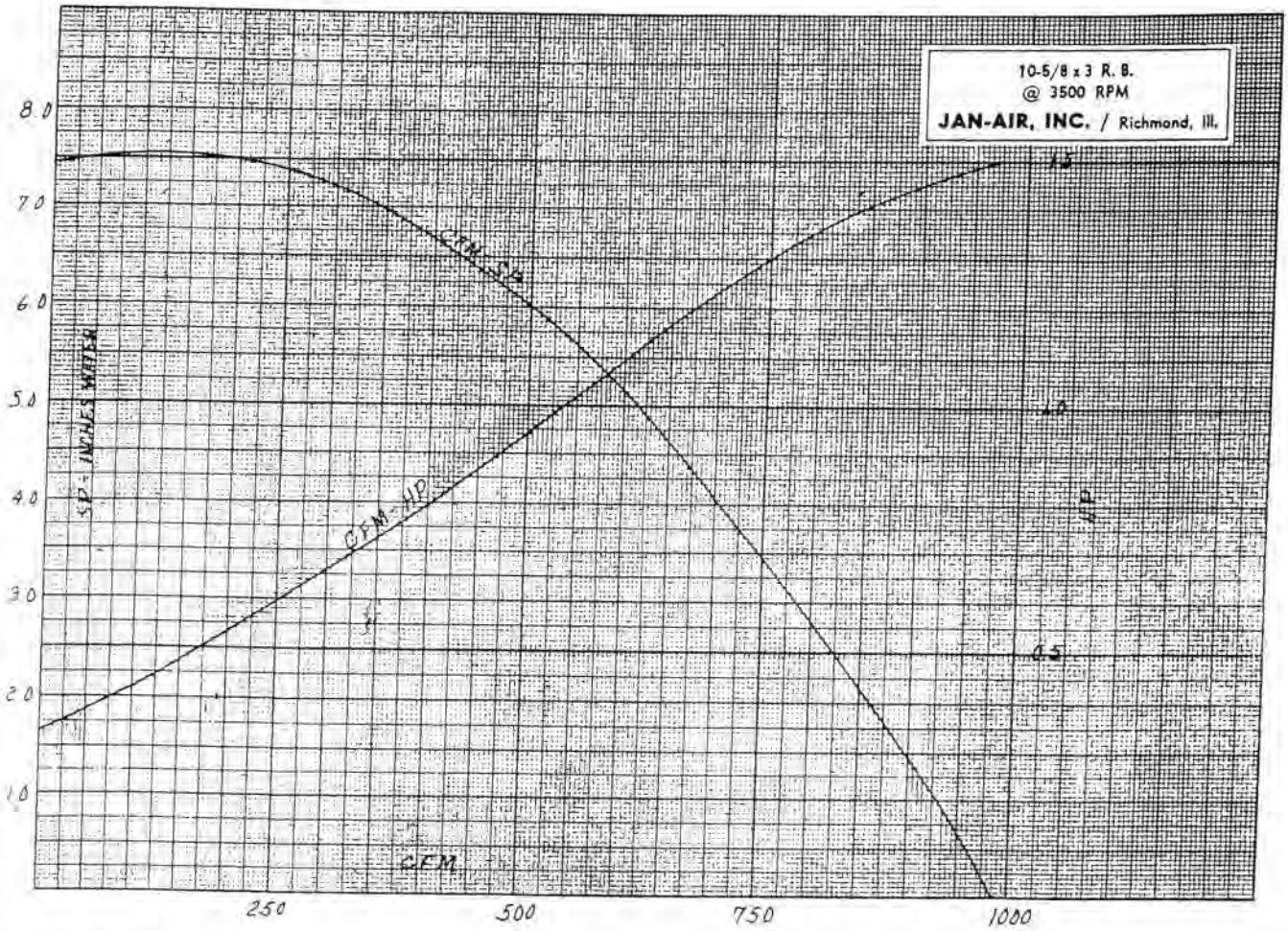
10-5/8 x 3 R. B.
@ 3500 RPM
JAN-AIR, INC. / Richmond, Ill.
8.0
7.0
6.0
5.0
4.0
3.0
2.0
1.0
SP - INCHES WATER
CFM-SP
CFM-HP
1.5
1.0
0.5
HP
CFM
250
500
750
1000

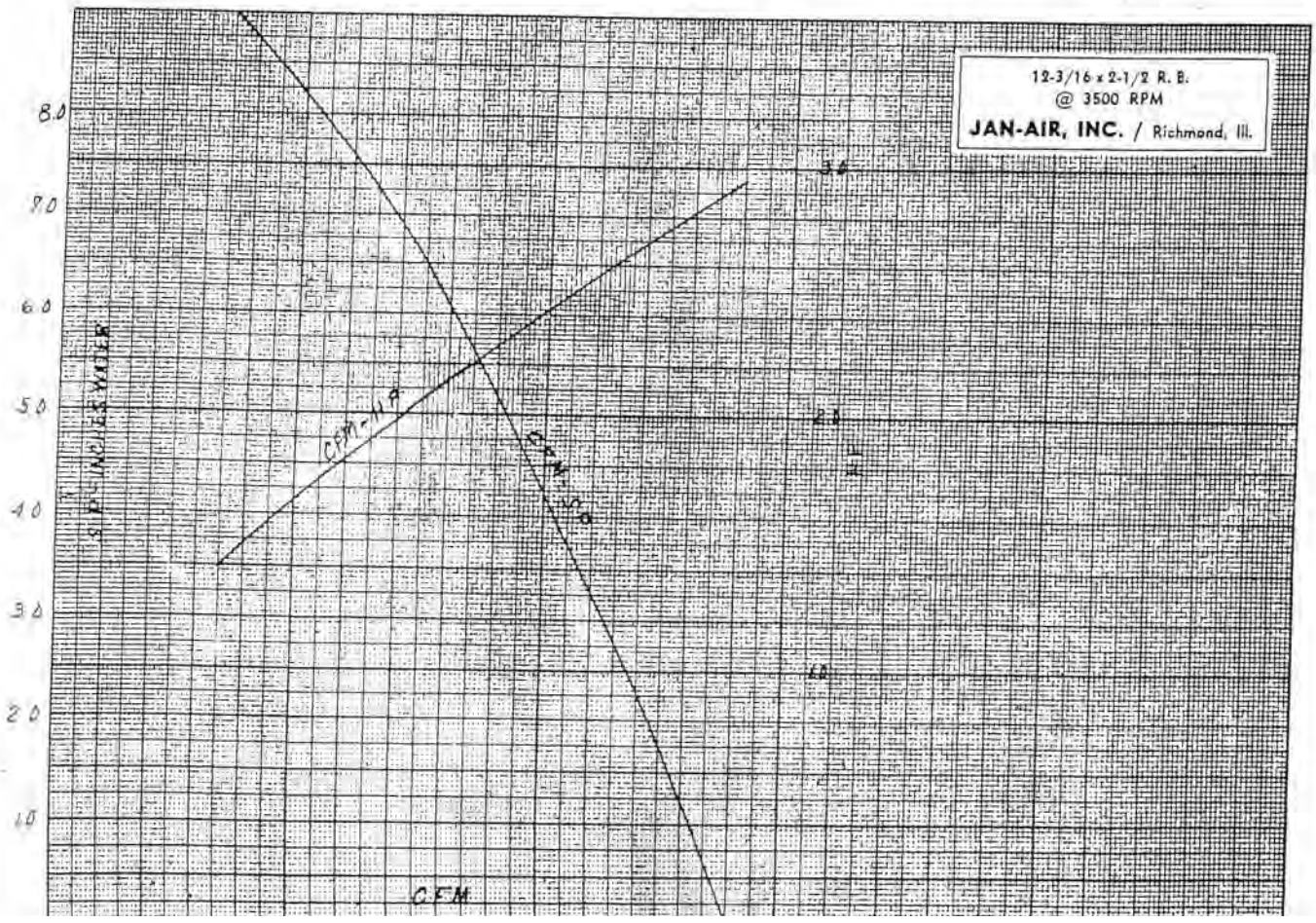
12-3/16 x 2-1/2 R. B.
@ 3500 RPM
JAN-AIR, INC. / Richmond, Ill.
8.0
7.0
6.0
5.0
4.0
3.0
2.0
1.0
SP - INCHES WATER
CFM-HP
CFM-SP
3.0
2.0
1.0
HP
CFM

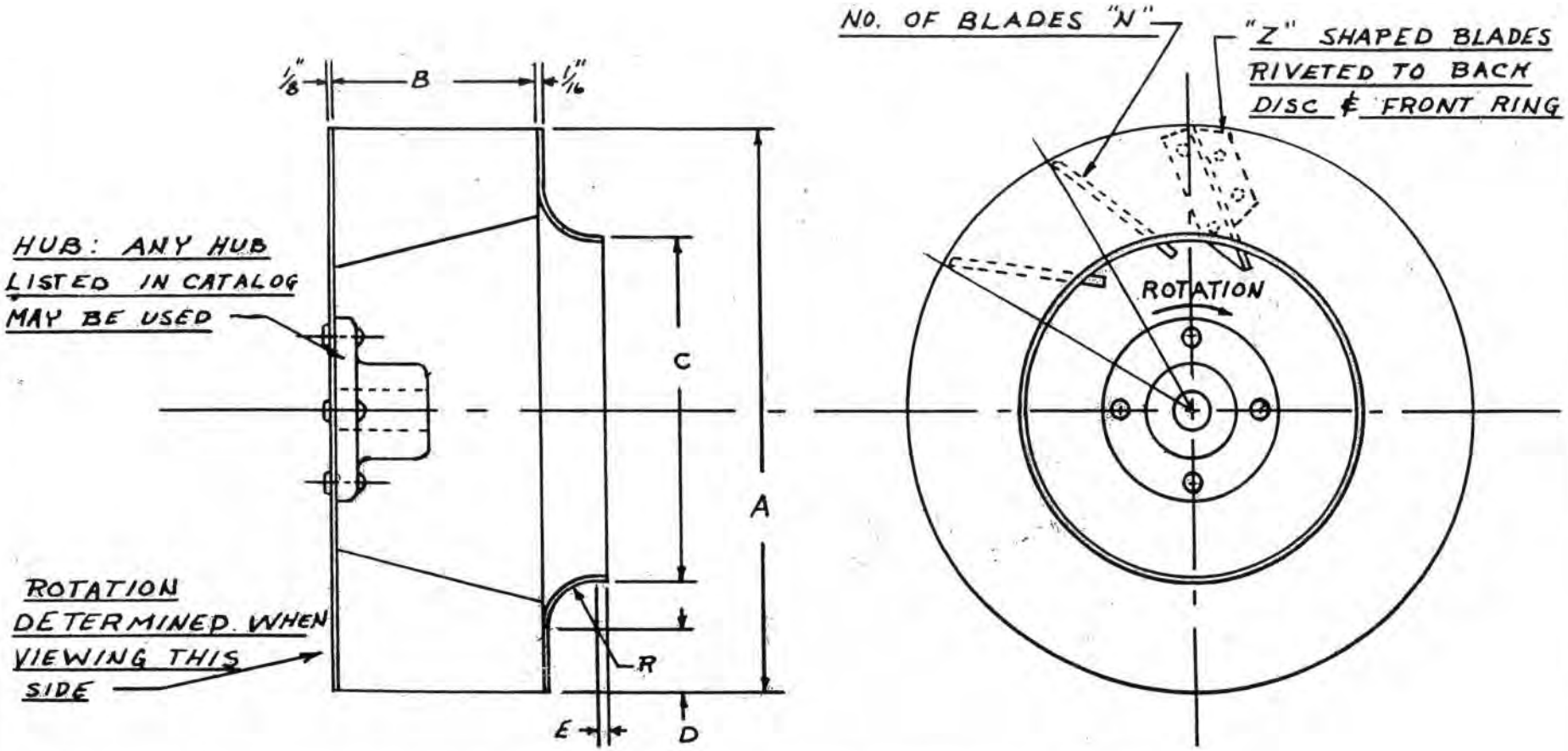

A	B	C	D	E	R	N
7 11/16	2 3/4	5 23/32	19/64	1/4	5/8	14
8 3/8	2¼-2¾-3⅛-3¾-4½-5-5½	5 23/32	41/64	1/4	5/8	12
9 7/16	SAME AS ABOVE	6 11/32	39/64	0	3/4	15
9 15/16	SAME AS ABOVE	6 11/16	13/16	3/16	3/4	12
10 5/8	SAME AS ABOVE	7 11/32	53/64	1/8	3/4	15
12 1/4	SAME AS ABOVE	8 5/8	7/8	1/8	7/8	14
13 1/2	SAME AS ABOVE	9 1/4	1 1/8	1/8	15/16	15
15	SAME AS ABOVE	10 5/16	1 7/32	1/8	1 1/16	16

DIMENSIONS OF BACKWARD CURVED WHEELS

Janette BACKWARD CURVE Blower Wheels

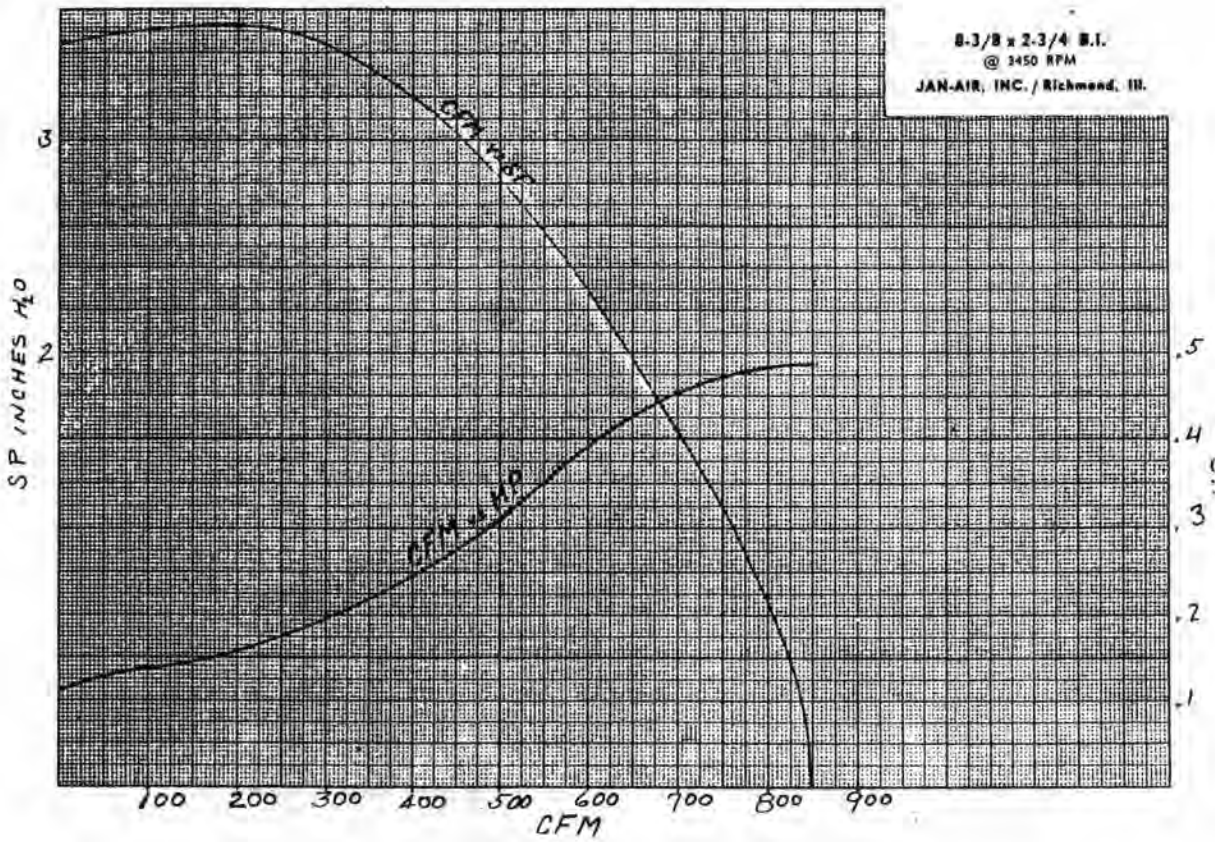

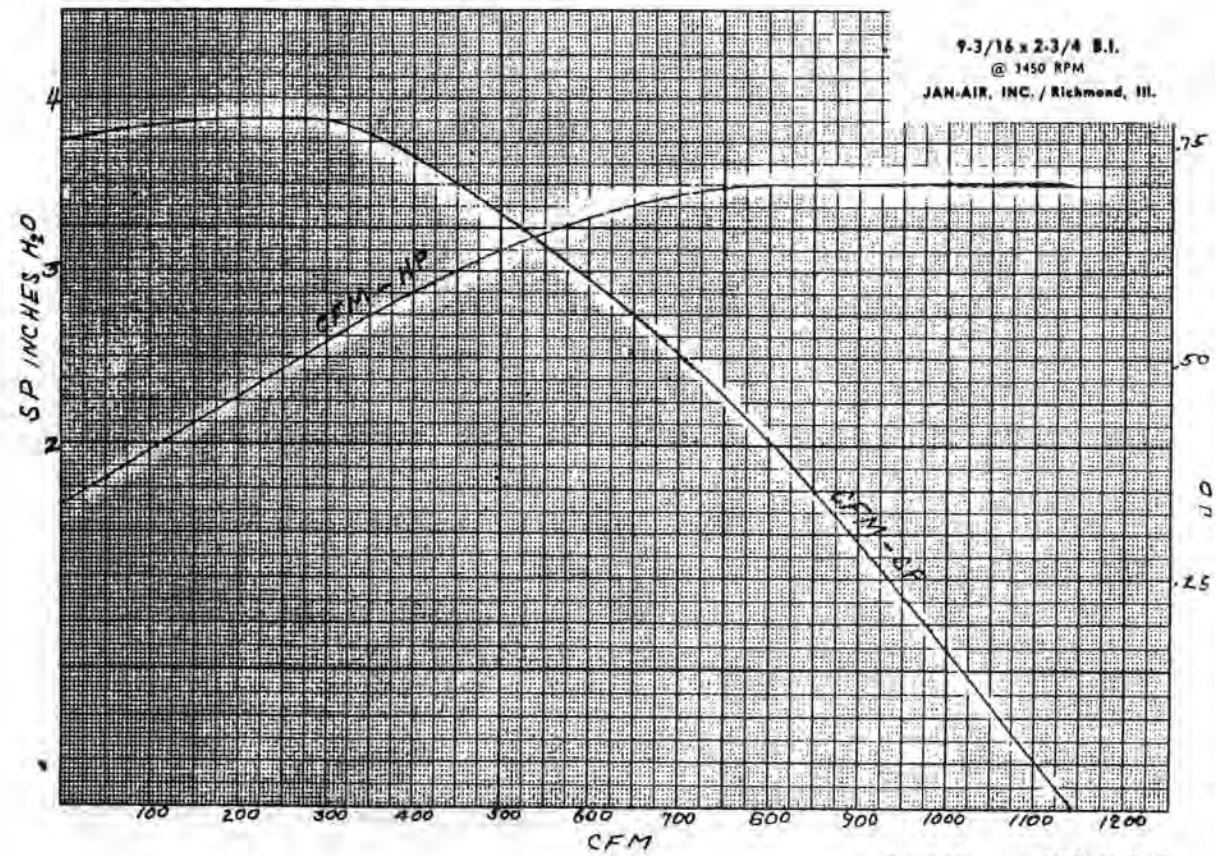

JAN AIR, Inc.
RICHMOND, ILLINOIS

Janette BACKWARD CURVE *Blower Wheels*

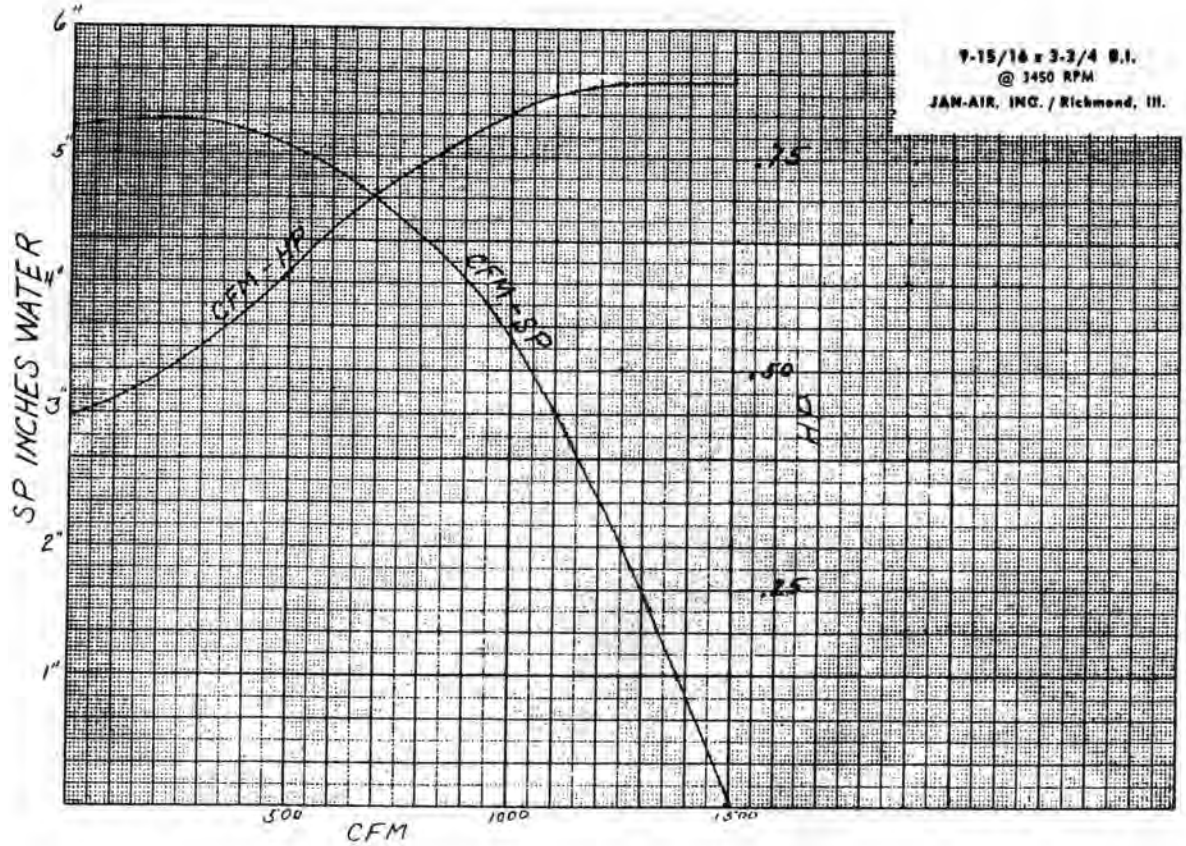

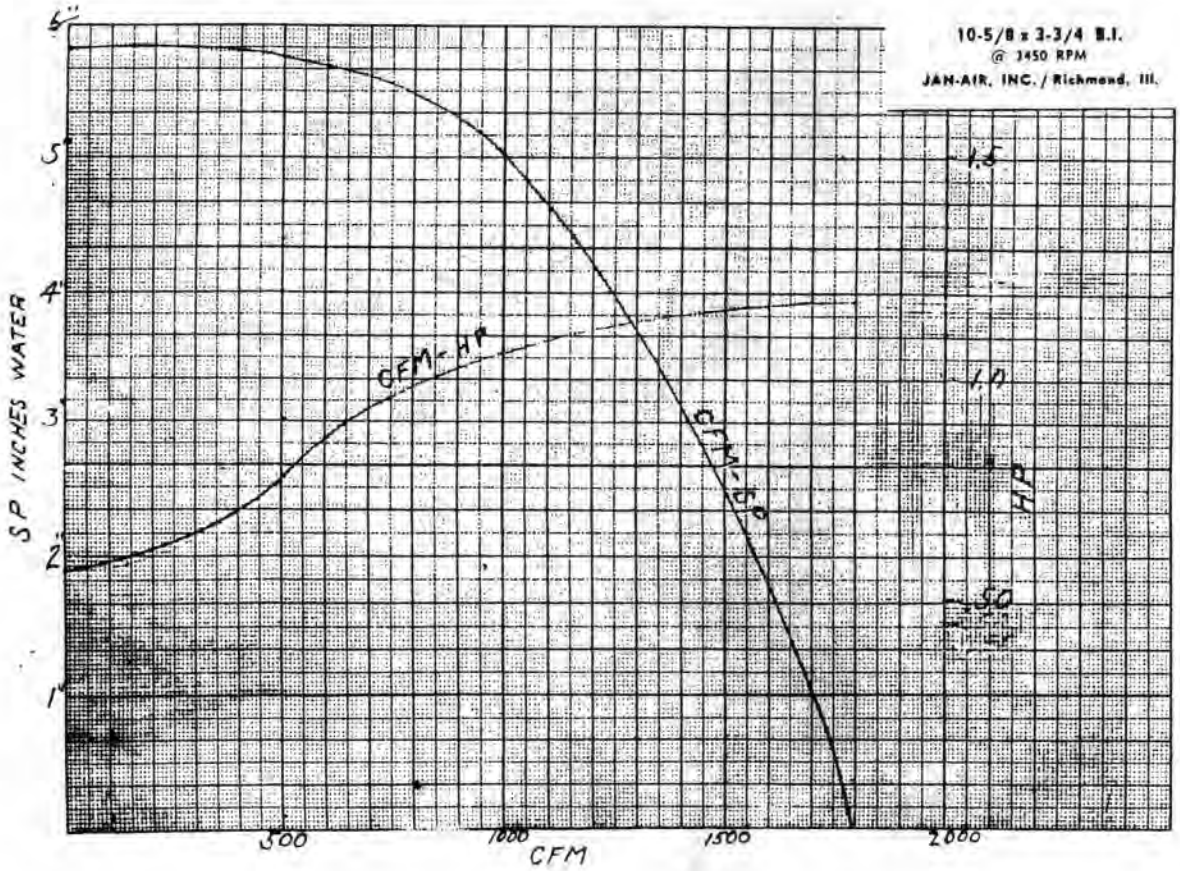

JAN AIR, Inc.
RICHMOND, ILLINOIS

Janette BACKWARD CURVE Blower Wheels

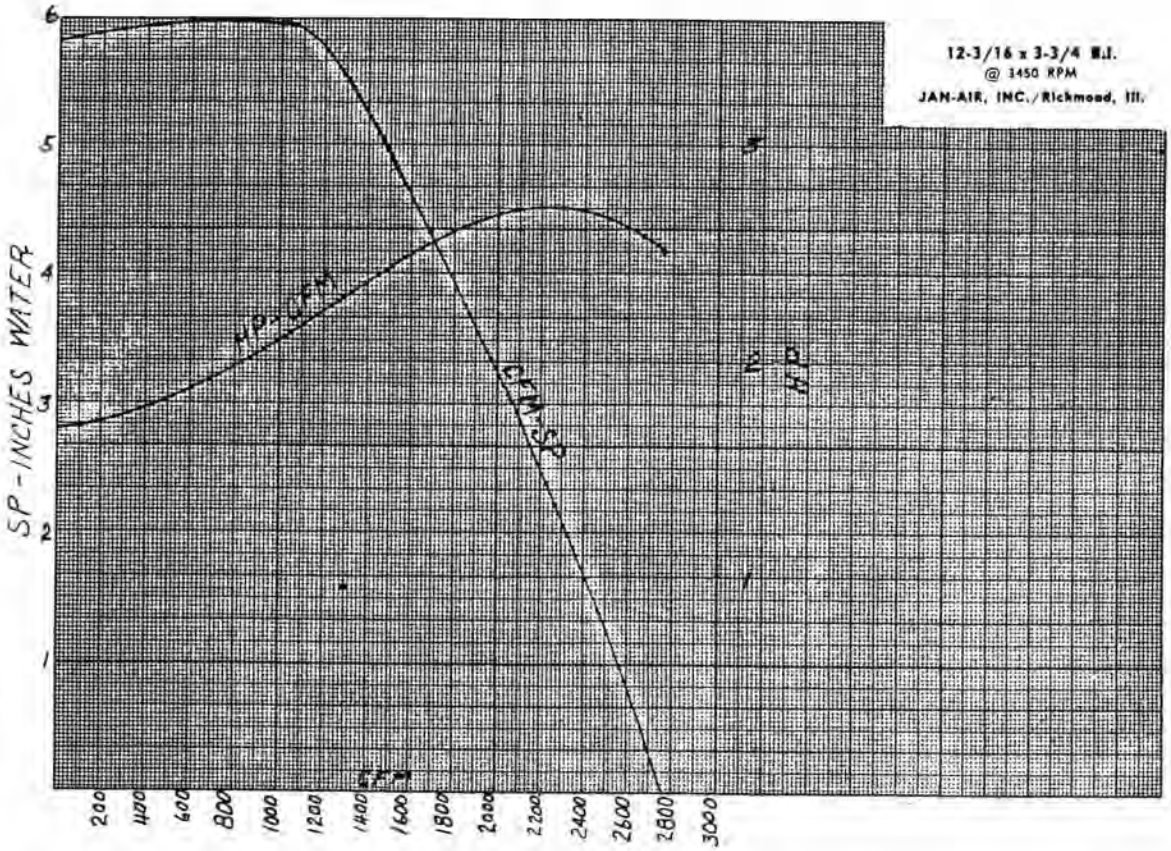

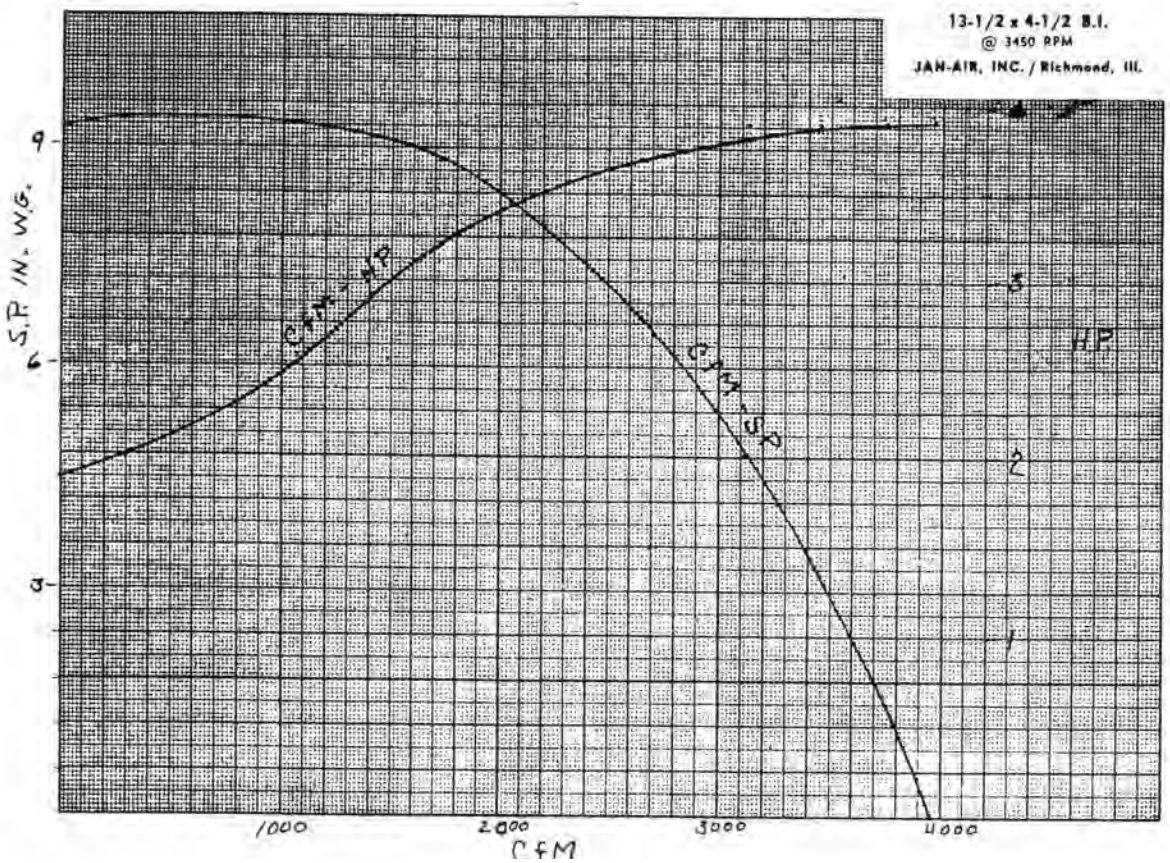

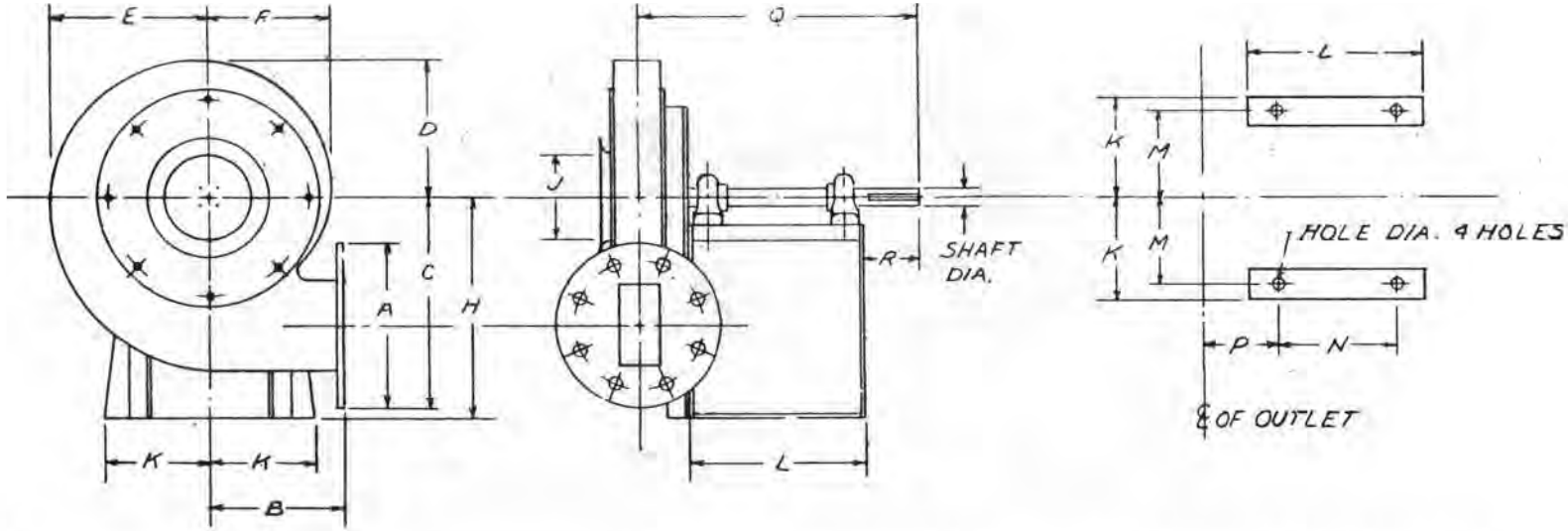

PRESSURE INCHES OF WATER	CATALOG NUMBER	CFM	HP	A O.D. FLG.	A PIPE SIZE	B	C	D	E	F	G	H	J	K	L	M	N	P	Q	SHAFT DIA.	KEYWAY	R	HOLE DIA.
	13-20-2-1	202	3	9	4	14½	19 7/16	14 5/8	15 7/8	13½	14 15/16	20	6	12½	13	11 5/8	9	5 3/16	19 11/16	15/16	1/4 × 1/8	3½	9/16
	13-20-3-1	303	5	11	6	14½	19 3/16	14 5/8	15 7/8	13½	13 15/16	20	6	12½	13	11 5/8	9	5 1/4	19 3/4	1 5/16	1/4 × 1/8	3½	9/16
20 oz	13-20-5-1	505	7½	11	6	14½	19 7/16	14 5/8	15 7/8	13½	13 15/16	20	6	12½	17	11 5/8	13	5 5/16	24 5/16	1 3/16	1/4 × 1/8	4	9/16
	13-20-7½-1	757	10	13½	8	14	18 7/8	14	15 1/8	12 7/8	12 1/8	19½	8	12	17	11 1/8	13	6 3/16	24 3/16	1 3/16	1/4 × 1/8	4	9/16
	13-20-10-1	1009	15	13½	8	14	18 7/8	14	15 1/8	12 7/8	12 1/8	19½	8	12	22	10 7/8	18	7 7/16	31 15/16	1 7/16	3/8 × 3/16	4½	11/16
37.610"	13-20-15-1	1519	20	16	10	14½	19 15/16	14 5/8	15 7/8	13½	11 15/16	20½	10	12½	22	11 3/8	18	7 13/16	32 5/16	1 7/16	3/8 × 3/16	4½	11/16
	13-20-20-1	2018	25	16	10	14½	19 15/16	14 5/8	15 7/8	13½	11 15/16	20½	10	12½	25½	11 3/8	21½	8 5/16	37 5/16	1 11/16	3/8 × 3/16	5½	11/16
	13-20-25-1	3500	30	19	12	14½	20 3/16	14 5/8	15 7/8	13½	10 15/16	21	12	12½	25½	11 3/8	21½	8 11/16	37 11/16	1 11/16	3/8 × 3/16	5½	11/16
	13-24-3-1	252	5	9	4	15½	20 3/4	15 7/8	17 1/8	14 5/8	16 1/4	21½	6	13½	13	12 5/8	9	5 1/4	19 3/4	15/16	1/4 × 1/8	3½	9/16
	13-24-5-1	421	7½	9	4	15½	20 3/4	15 7/8	17 1/8	14 5/8	16 1/4	21½	6	13½	17	12 5/8	13	5 5/16	24 5/16	1 3/16	1/4 × 1/8	4	9/16
24 oz	13-24-7½-1	631	10	11	6	15	19 15/16	15 1/4	16 3/8	14	14 7/16	20½	6	13	17	12 1/8	13	5 3/4	24 3/4	1 3/16	1/4 × 1/8	4	9/16
	13-24-10-1	841	15	13½	8	15	20 3/16	15 1/4	16 3/8	14	13 7/16	21	8	13	22	11 7/8	18	7 1/16	31 9/16	1 7/16	3/8 × 3/16	4½	11/16
	13-24-15-1	1262	20	13½	8	15	20 3/16	15 1/4	16 3/8	14	13 7/16	21	8	13	22	11 7/8	18	7 9/16	32 1/16	1 7/16	3/8 × 3/16	4½	11/16
41.568"	13-24-20-1	1682	25	16	10	15	20 7/16	15 1/4	16 3/8	14	12 7/16	21	10	13	25½	11 7/8	21½	7 11/16	36 11/16	1 11/16	3/8 × 3/16	5½	11/16
	13-24-25-1	2102	30	16	10	15	20 7/16	15 1/4	16 3/8	14	12 7/16	21	10	13	25½	11 7/8	21½	7 5/16	36 5/16	1 11/16	3/8 × 3/16	5½	11/16
	13-28-3-1	216	5	9	4	16	21 1/4	16 3/8	17 5/8	15 1/8	16 3/4	22	4	14	13	13 1/8	9	4 3/4	19 1/4	15/16	1/4 × 1/8	3½	9/16
	13-28-5-1	360	7½	10	5	16½	21 3/4	16 7/8	18 1/8	15 5/8	16 3/4	22½	5	14½	17	13 5/8	13	4 7/8	23 7/8	1 5/16	1/4 × 1/8	4	9/16
28 oz	13-28-7½-1	541	10	11	6	17½	22 9/16	17 9/16	18 7/8	16 1/4	17 1/16	23	6	15	17	14 1/8	13	5 1/8	24 1/8	1 3/16	1/4 × 1/8	4	9/16
	13-28-10-1	721	15	13½	8	17½	22 13/16	17 9/16	18 7/8	16 1/4	16 1/16	23½	8	15	22	13 7/8	18	5 15/16	30 7/16	1 7/16	3/8 × 3/16	4½	11/16
	13-28-15-1	1081	20	16	10	17½	23 1/16	17 9/16	18 7/8	16 1/4	15 1/16	23½	10	15	22	13 7/8	18	6 1/16	30 11/16	1 7/16	3/8 × 3/16	4½	11/16
48.497"	13-28-20-1	1492	25	16	10	17½	23 1/16	17 9/16	18 7/8	16 1/4	15 1/16	23½	10	15	25½	13 7/8	21½	7 3/16	36 3/16	1 11/16	3/8 × 3/16	5½	11/16
	13-28-25-1	1802	30	16	10	17½	23 1/16	17 9/16	18 7/8	16 1/4	15 1/16	23½	10	15	25½	13 7/8	21½	7 3/4	36 3/4	1 11/16	3/8 × 3/16	5½	11/16
	13-28-30-1	2163	40	19	12	17½	23 1/16	17 9/16	18 7/8	16 1/4	14 1/16	24	12	15	25½	13 5/8	21½	7½	38	1 15/16	1/2 × 1/4	6	13/16
	13-32-5-1	315	7½	9	4	18	23 1/8	18 1/8	19 3/8	16 3/4	18 9/16	24	6	15½	17	14 5/8	13	4 3/4	23 3/4	1 3/16	1/4 × 1/8	4	9/16
32 oz	13-32-7½-1	473	10	9	4	18	23 1/8	18 1/8	19 3/8	16 3/4	18 9/16	24	6	15½	17	14 5/8	13	4 3/4	23 3/4	1 3/16	1/4 × 1/8	4	9/16
	13-32-10-1	631	15	13½	8	18	23 5/16	18 1/8	19 3/8	16 3/4	16 9/16	24	8	15½	22	14 3/8	18	5 3/8	29 7/8	1 7/16	3/8 × 3/16	4½	11/16
55.925"	13-32-15-1	947	20	13½	8	18	23 5/16	18 1/8	19 3/8	16 3/4	16 9/16	24	8	15½	22	14 3/8	18	5 3/8	29 7/8	1 7/16	3/8 × 3/16	4½	11/16
	13-32-20-1	1261	25	13½	8	18	23 5/16	18 1/8	19 3/8	16 3/4	16 9/16	24	8	15½	25½	14 3/8	21½	5 3/8	33 3/8	1 11/16	3/8 × 3/16	5½	11/16
	13-32-25-1	1577	30	13½	8	18	23 5/16	18 1/8	19 3/8	16 3/4	16 9/16	24	8	15½	25½	14 3/8	21½	5 3/8	33 3/8	1 11/16	3/8 × 3/16	5½	11/16

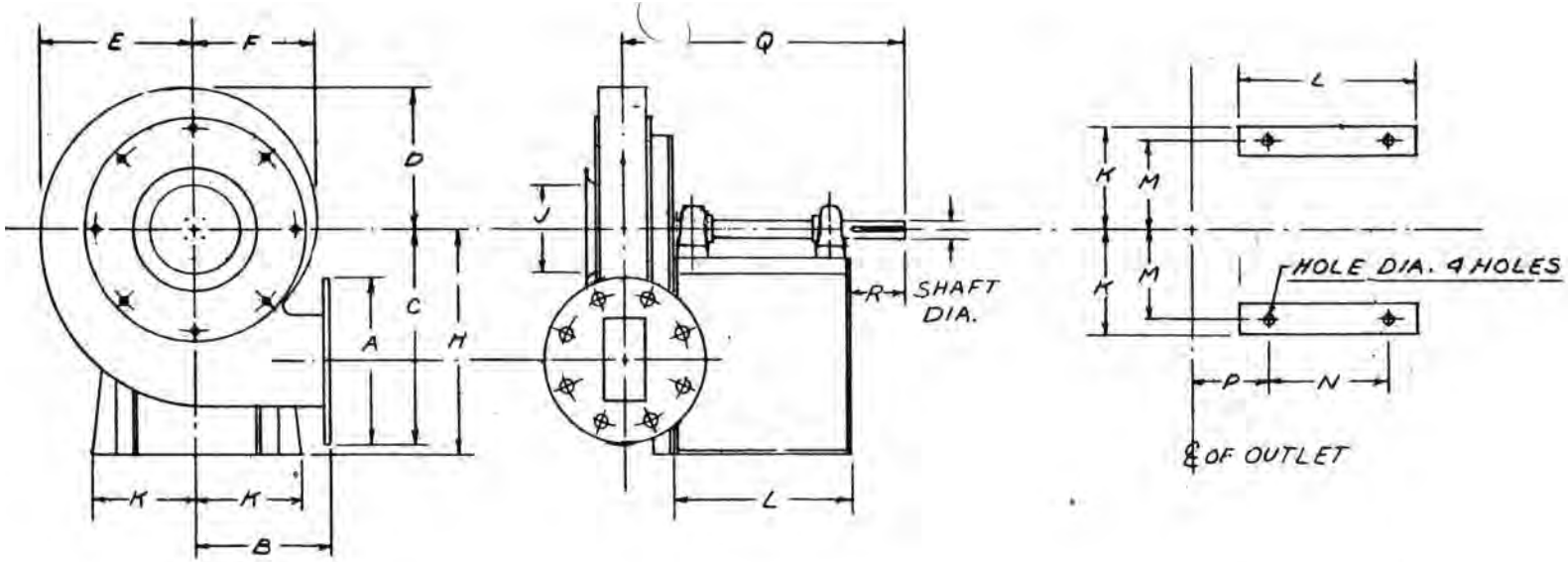

PRESSURE INCHES OF WATER	CATALOG NUMBER	CFM	HP	A O.D. FLG.	A PIPE SIZE	B	C	D	E	F	G	H	J	K	L	M	N	P	Q	SHAFT DIA.	KEYWAY	R	HOLE DIA.
6 oz. 10.392"	13-6-1½-1	546	2	11	6	9½	13⅜	9¼	10⅛	8⅜	7⅞	14	8	8	13	7⅛	9	6¼	20¾	15/16	¼ x ⅛	3½	9/16
8 oz. 13.856"	13-8-1½-1	378	2	11	6	10	14 3/16	10	10⅞	9	8 11/16	15	6	8½	13	7⅝	9	5⅝	20⅛	15/16	¼ x ⅛	3½	9/16
	13-8-2-1	505	3	11	6	10	14 3/16	10	10⅞	9	8 11/16	15	6	8½	13	7⅝	9	5¾	20¼	15/16	¼ x ⅛	3½	9/16
	13-8-3-1	757	5	13½	8	10	14 3/16	10	10⅞	9	8 11/16	15	8	8½	13	7⅝	9	5 15/16	20 3/16	15/16	¼ x ⅛	3½	9/16
	13-8-5-1	1262	7½	13½	8	10½	14 15/16	10½	11⅜	9½	8¾	15½	8	9	17	8⅛	13	6 5/16	25 5/16	1 3/16	¼ x ⅛	4	9/16
	13-8-7½-1	1692	10	16	10	11	16	11⅛	12⅛	10⅛	8	16½	9	9½	17	8⅝	13	8 7/16	27 3/16	1 3/16	¼ x ⅛	4	9/16
	13-8-10-1	2523	15	16	10	11½	16½	11⅝	12⅝	10⅝	8½	17	9	10	22	8⅞	18	11⅛	33⅝	1 3/16	⅜ x 3/16	4¼	11/16
10 oz. 17.320"	13-10-1½-1	303	2	11	6	10½	14 1/16	10½	11⅜	9½	9 3/16	15½	6	9	13	8⅛	9	5⅝	20⅛	15/16	¼ x ⅛	3½	9/16
	13-10-2-1	404	3	11	6	10½	14 1/16	10½	11⅜	9½	9 3/16	15½	6	9	13	8⅛	9	5¾	20¼	15/16	¼ x ⅛	3½	9/16
	13-10-3-1	605	5	13½	8	10½	14 15/16	10½	11⅜	9½	8 3/16	15½	8	9	13	8⅛	9	6	20½	15/16	¼ x ⅛	3½	9/16
	13-10-5-1	1009	7½	13½	8	11	15¾	11⅛	12⅛	10⅛	9	16½	8	9½	17	8⅝	13	6¼	25¼	1 3/16	¼ x ⅛	4	9/16
	13-10-7½-1	1514	10	16	10	11½	16½	11⅝	12⅝	10⅝	8½	17	10	10	17	9⅛	13	6⅜	25⅜	1 3/16	¼ x ⅛	4	9/16
	13-10-10-1	2018	15	16	10	11½	16½	11⅝	12⅝	10⅝	8½	17	10	10	22	8⅞	18	7 1/16	31 3/16	1 3/16	⅜ x 3/16	4½	11/16
	13-10-15-1	3027	20	19	12	11½	17	11⅝	12⅝	10⅝	7½	17½	12	10	22	8⅞	18	9⅛	33⅝	1 3/16	⅜ x 3/16	4½	11/16
12 oz 20.784"	13-12-1½-1	252	2	9	4	11½	16	11⅝	12⅝	10⅝	11½	16½	6	10	13	9⅛	9	5	19½	15/16	¼ x ⅛	3½	9/16
	13-12-2-1	336	3	11	6	11½	16	11⅝	12⅝	10⅝	10½	16½	6	10	13	9⅛	9	5⅝	20⅛	15/16	¼ x ⅛	3½	9/16
	13-12-3-1	505	5	11	6	11½	16	11⅝	12⅝	10⅝	10½	16½	6	10	13	9⅛	9	5¾	20¼	15/16	¼ x ⅛	3½	9/16
	13-12-5-1	891	7½	13½	8	11½	16¼	11⅝	12⅝	10⅝	9½	17	8	10	17	9⅛	13	6⅝	25⅝	1 3/16	¼ x ⅛	4	9/16
	13-12-7½-1	1262	10	13½	8	11½	16¼	11⅝	12⅝	10⅝	9½	17	8	10	17	9⅛	13	6¾	25¾	1 3/16	¼ x ⅛	4	9/16
	13-12-10-1	1682	15	16	12	12½	16⅝	12⅜	13⅜	11¼	8 5/16	17	12	10½	22	9⅜	18	8⅛	32⅝	1 3/16	⅜ x 3/16	4½	11/16
	13-12-15-1	2523	20	16	12	13	16 13/16	12⅜	13⅜	11¾	8 13/16	17½	10	11	22	9⅞	18	8 5/16	32 13/16	1 3/16	⅜ x 3/16	4½	11/16
16 oz 27.712"	13-16-1½-1	189	2	9	4	13½	18⅛	13½	14⅝	12⅜	13⅝	18½	6	11½	13	10⅝	9	4¼	19¼	15/16	¼ x ⅛	3½	9/16
	13-16-2-1	252	3	9	4	13½	18⅛	13½	14⅝	12⅜	13⅝	18½	6	11½	13	10⅝	9	5¼	19¾	15/16	¼ x ⅛	3½	9/16
	13-16-3-1	379	5	11	6	13½	18⅛	13½	14⅝	12⅜	12⅜	18½	6	11½	13	10⅝	9	6	20½	15/16	¼ x ⅛	3½	9/16
	13-16-5-1	631	7½	11	6	13	17 5/16	12⅞	13⅞	11¾	11 13/16	18	6	11	17	10⅛	13	5⅝	24 9/16	1 3/16	¼ x ⅛	4	9/16
	13-16-7½-1	946	10	13½	8	13	17 3/16	12⅞	13⅞	11¾	10 13/16	18	6	11	17	10⅛	13	5 13/16	24 13/16	1 3/16	¼ x ⅛	4	9/16
	13-16-10-1	1261	15	16	10	13	17 13/16	12⅞	13⅞	11¾	9 13/16	18½	10	11	22	9⅞	18	6 15/16	31 7/16	1 3/16	⅜ x 3/16	4½	11/16
	13-16-15-1	1892	20	19	12	13½	19⅛	13½	14⅝	12⅜	9⅝	18½	11	11½	22	10⅜	18	8½	33	1 3/16	⅜ x 3/16	4½	11/16
	13-16-20-1	2523	25	19	12	13½	19⅛	13½	14⅝	12⅜	9⅝	19½	11	11½	25¼	10⅜	21½	8 11/16	37 11/16	1 11/16	⅜ x 3/16	5½	11/16
	13-16-25-1	3154	30	19	12	13½	19⅛	13½	14⅝	12⅜	9⅝	19½	11	11½	25½	10⅜	21½	9 5/16	38 5/16	1 11/16	3/16 x 3/16	5½	11/16

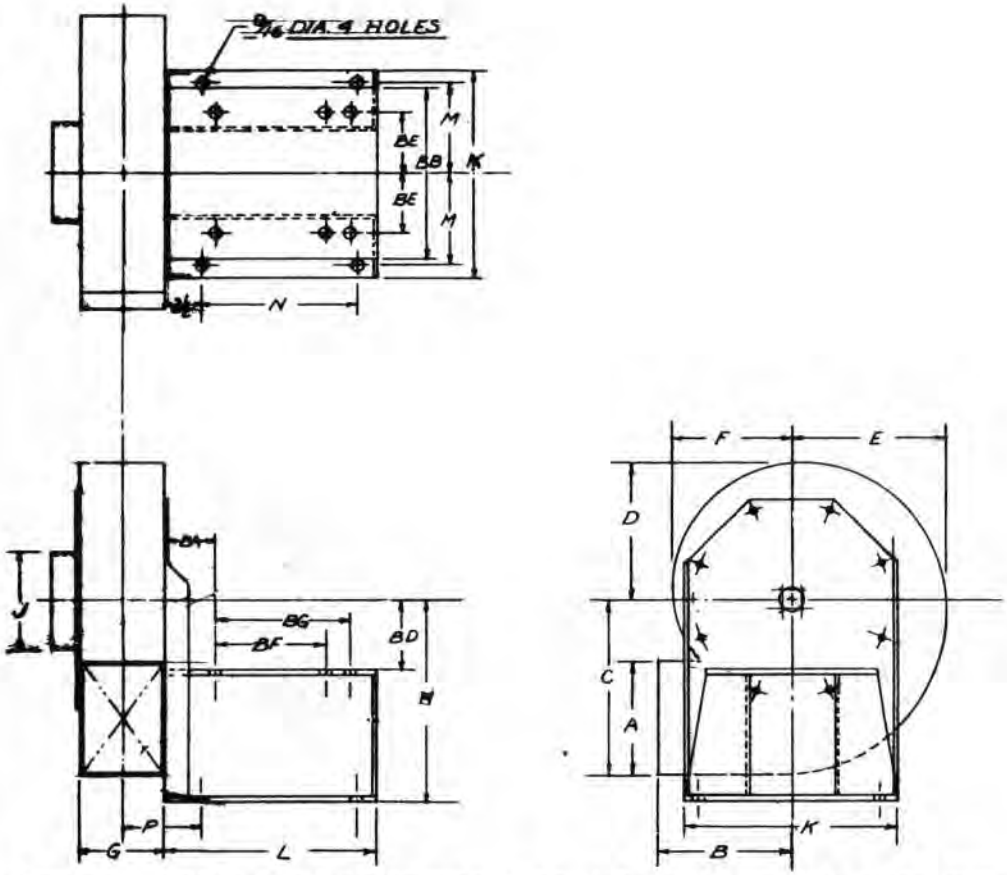

*CATALOG NUMBER MUST END WITH A MOTOR PEDESTAL NUMBER

HP	RPM	FRAME	SHAFT SIZE	KEYWAY	PEDESTAL NUMBER
5	3600	182T	1 1/8	1/4 x 1/8	2
7 1/2	3600	184T	1 1/8	1/4 x 1/8	2
10	3600	213T	1 3/8	5/16 x 5/32	3
15	3600	215T	1 3/8	5/16 x 5/32	3
20	3600	254T	1 5/8	3/8 x 3/16	4
25	3600	256T	1 5/8	3/8 x 3/16	4
30	3600	284TS	1 5/8	3/8 x 3/16	5
40	3600	286TS	1 5/8	3/8 x 3/16	5

NOTE: MOTOR PEDESTAL ARE CONSTRUCTED FOR STANDARD NEMA MOTOR FRAMES AND WILL ACCOMMODATE THE NEW "T" LINE

DIMENSIONS FOR ARRANGEMENT 4 FAN BASES

PEDESTAL NUMBER	BA	BB	BD	BE	BF	BG	L	N
2	2 3/4	11	4 5/8	3 3/4	4 1/2	5 1/2	11	8
3	3 1/2	12 1/2	5 3/8	4 1/4	5 1/2	7	12 1/2	9
4	4 1/4	14 1/2	6 3/8	5	8 1/4	10	17	13 1/2
5	4 3/4	16	7 1/8	5 1/2	9 1/2	11	18	14 1/2

*SEE NOTE HEAVY DUTY INDUSTRIAL TYPE AIR HANDLING BH DISCHARGE

CATALOG NO.*	WHL SIZE	A	B	C	D	E	F	G	H	J	K	M	P
16-1225-	12 1/4 x	6 13/16	9	10 5/8	9 1/8	9 3/8	8 3/8	6 1/8	12	7	15	6 1/2	5 9/16
16-1400-	14 x	7 3/8	10 1/4	12 3/8	10 1/2	11 3/8	9 5/8	6 3/4	14	8	16 1/2	7 1/4	5 7/8
16-1562-	15 5/8 x	8 3/4	11 1/2	13 3/4	11 3/4	12 3/4	10 5/8	7 11/16	15	9	18	8	6 11/32
16-1737-	17 3/8 x	9 15/16	12 1/2	15 3/8	13 1/8	14 1/4	11 7/8	8 7/16	17	10	20	9	6 23/32
16-1918-	19 1/8 x 9 9/16	10 11/16	13 3/4	16 3/4	14 1/4	15 1/2	13 1/8	9 3/8	18	11	21 1/2	9 3/4	7 3/16
16-2087-	20 7/8 x	11 3/4	15	18 3/8	15 7/8	17 1/8	14 5/8	10 1/16	20	12	23 1/2	10 3/4	7 17/32

JAN-AIR, Inc.
RICHMOND, ILL. 60071

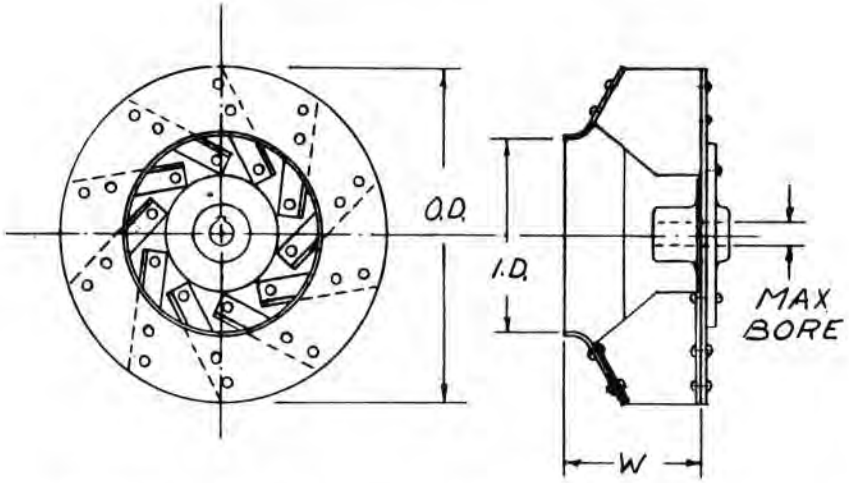

RADIAL BLADE AIR HANDLING WHEEL

CATALOG NO.	O.D.	I.D.	W	MAX. BORE
16-1225-481	12 1/4	7 3/16	4 13/16	1 11/16
16-1400-553	14	8 3/16	5 17/32	1 11/16
16-1562-621	15 5/8	9 3/16	6 7/32	1 11/16
16-1737-684	17 3/8	10 3/16	6 27/32	1 11/16
16-1912-756	19 1/8	11 3/16	7 9/16	1 15/16
16-2087-828	20 7/8	12 3/16	8 9/32	1 15/16
16-2262-890	22 5/8	13 9/16	8 29/32	1 15/16
16-2437-962	24 3/8	14 9/16	9 5/8	2 3/16
16-2612-1034	26 1/8	15 3/16	10 11/32	2 3/16
16-2962-1168	29 5/8	17 1/4	11 11/16	2 7/16
16-3300-1306	33	19 1/4	13 1/16	2 7/16
16-3650-1450	36 1/2	21 1/4	14 1/2	2 11/16

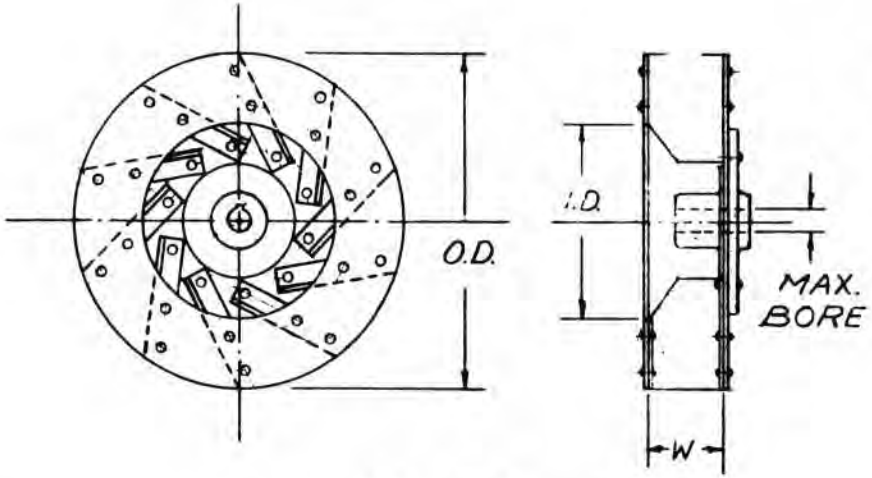

AIR HANDLING WHEEL

DIMENSIONS IN INCHES

CATALOG NO.	O.D.	I.D.	W	MAX. BORE
26-525-125	5 1/4	3	1 1/4	5/8
26-700-168	7	4	1 11/16	8
26-862-206	8 5/8	5	2 1/16	
26-1050-250	10 1/2	6	2 1/2	
26-1225-290	12 1/4	7	2 29/32	1 11/16
26-1400-368	14	8	3 11/32	1 11/16
26-1562-375	15 5/8	9	3 3/4	1 11/16
26-1737-412	17 3/8	10	4 1/8	1 11/16
26-1912-456	19 1/8	11	4 9/16	1 15/16
26-2087-500	20 7/8	12	5	1 15/16
26-2262-540	22 5/8	13	5 13/32	1 15/16
26-2437-581	24 3/8	14	5 13/16	2 3/16
26-2612-625	26 1/8	15	6 1/4	2 3/16
26-2787-665	27 7/8	16	6 21/32	2 3/16
26-2962-706	29 5/8	17	7 1/16	2 7/16

JAN-AIR, Inc.

RICHMOND, ILL. 60071

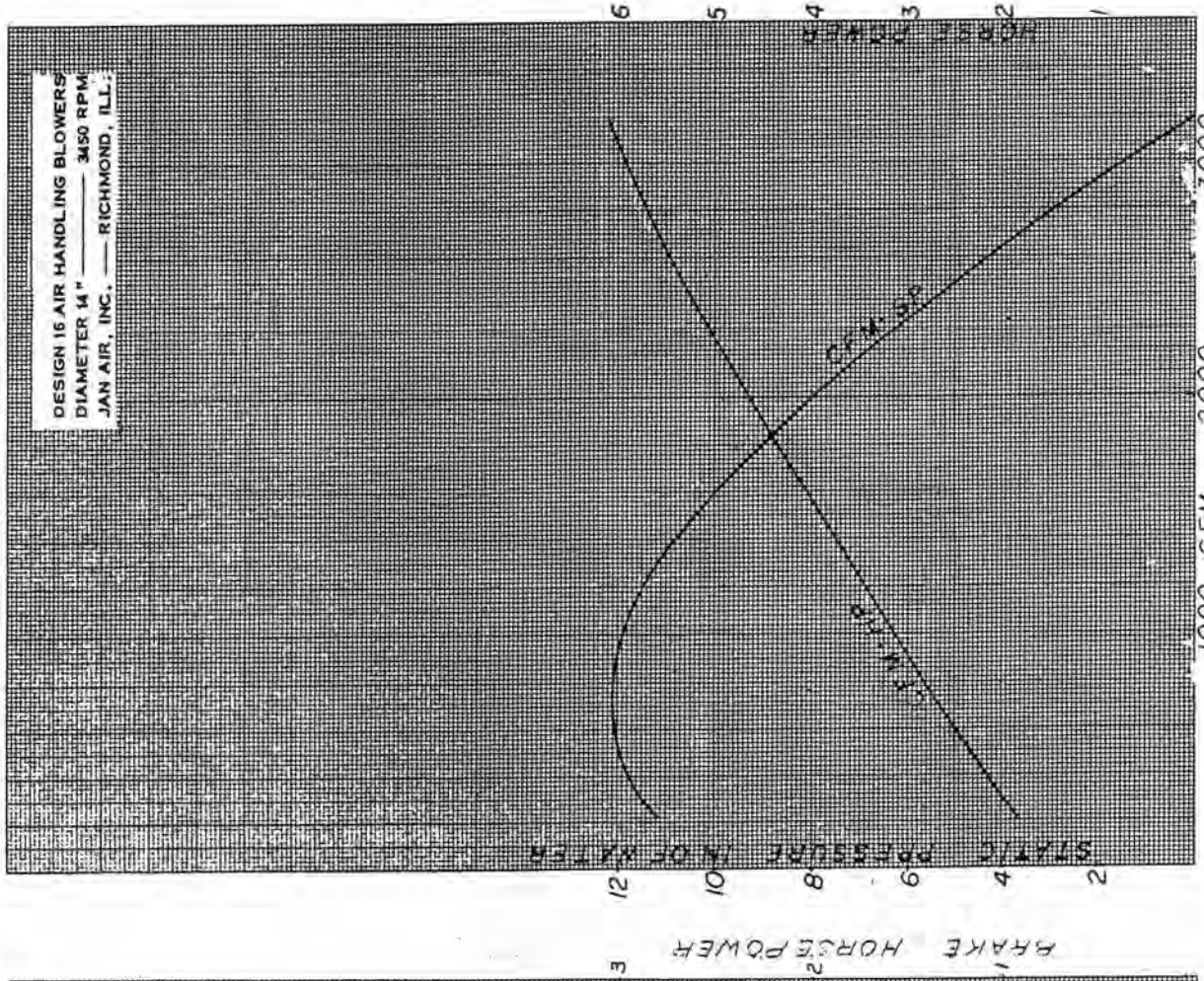

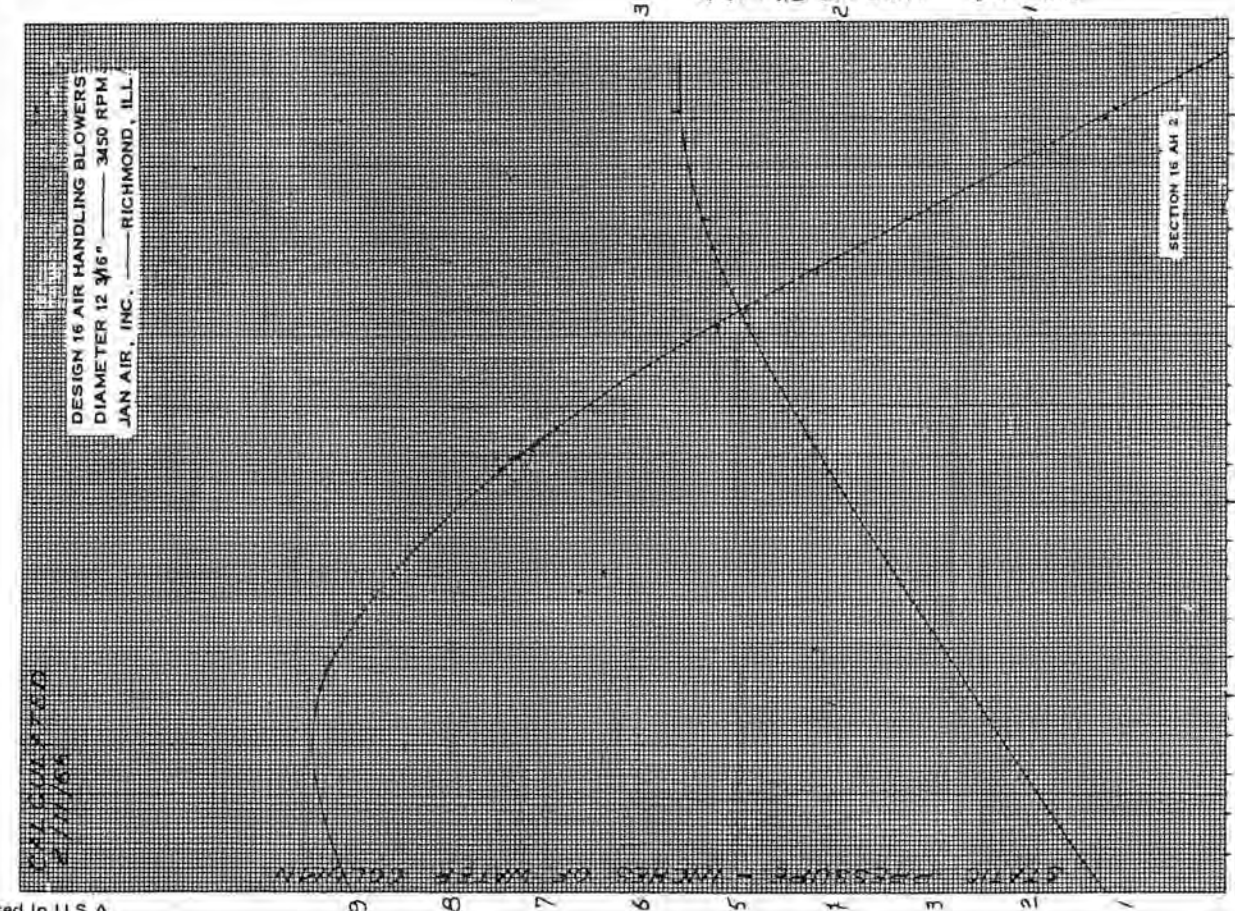

JAN-AIR, Inc.

RICHMOND, ILL. 60071

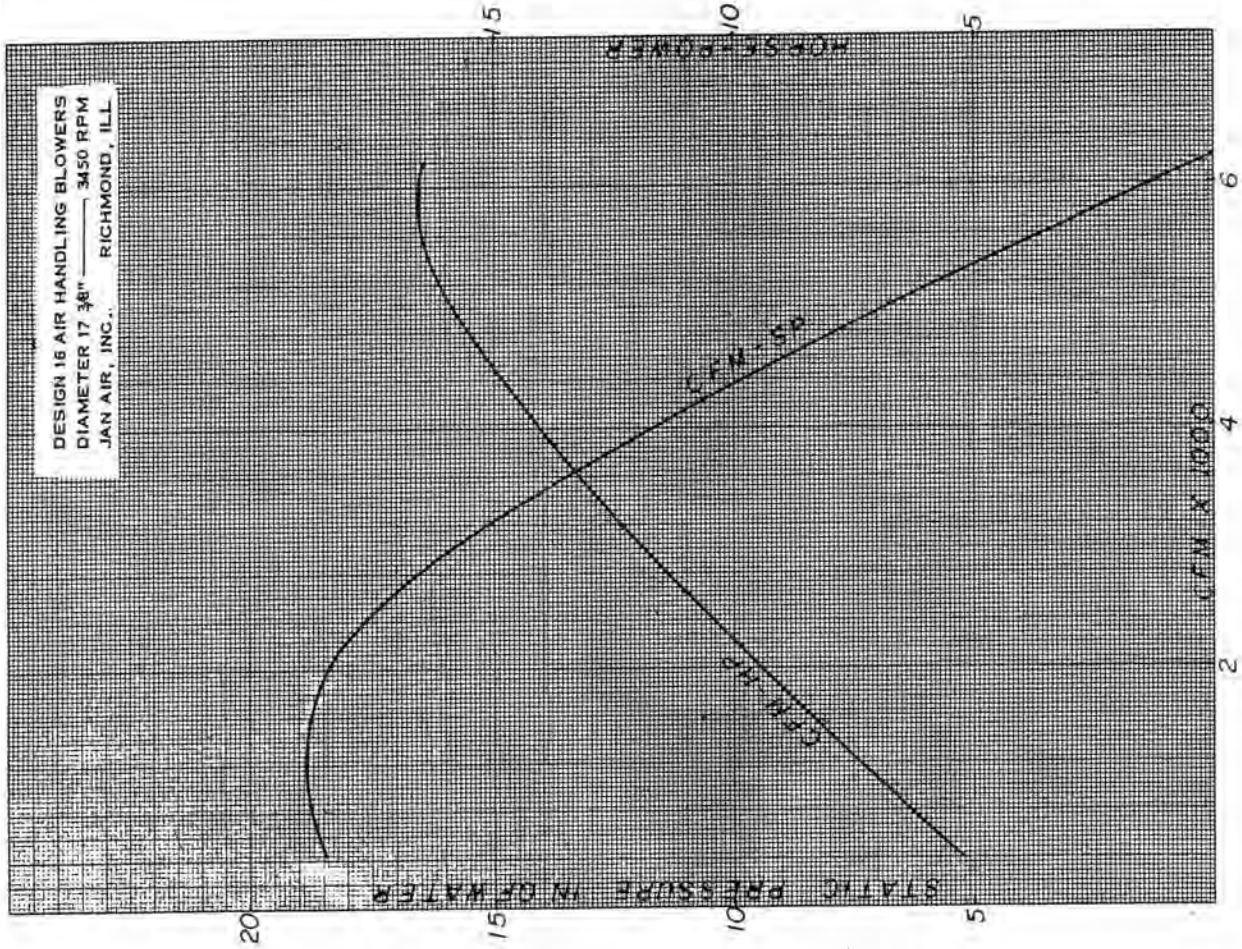

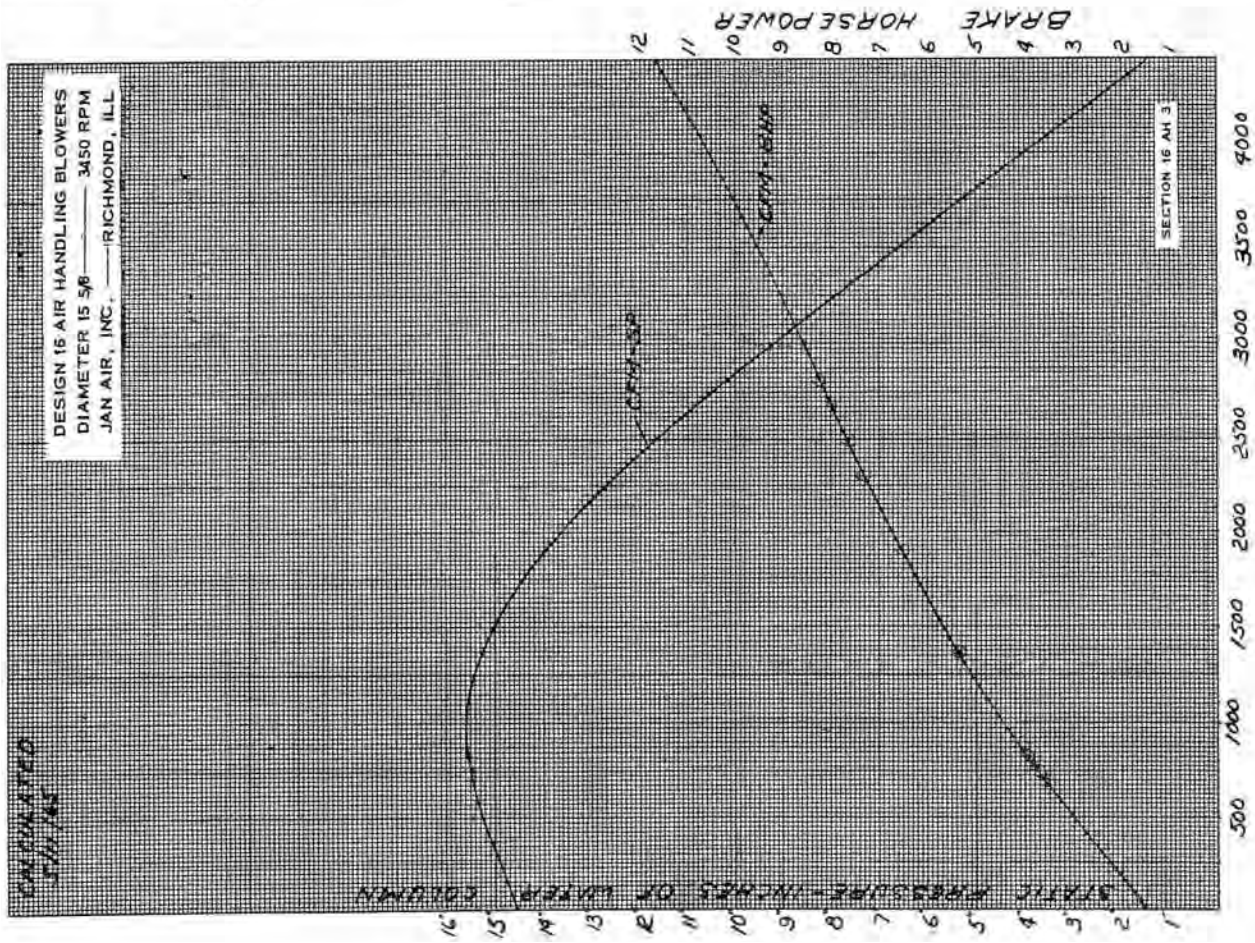

JAN-AIR, Inc.

RICHMOND, ILL. 60071

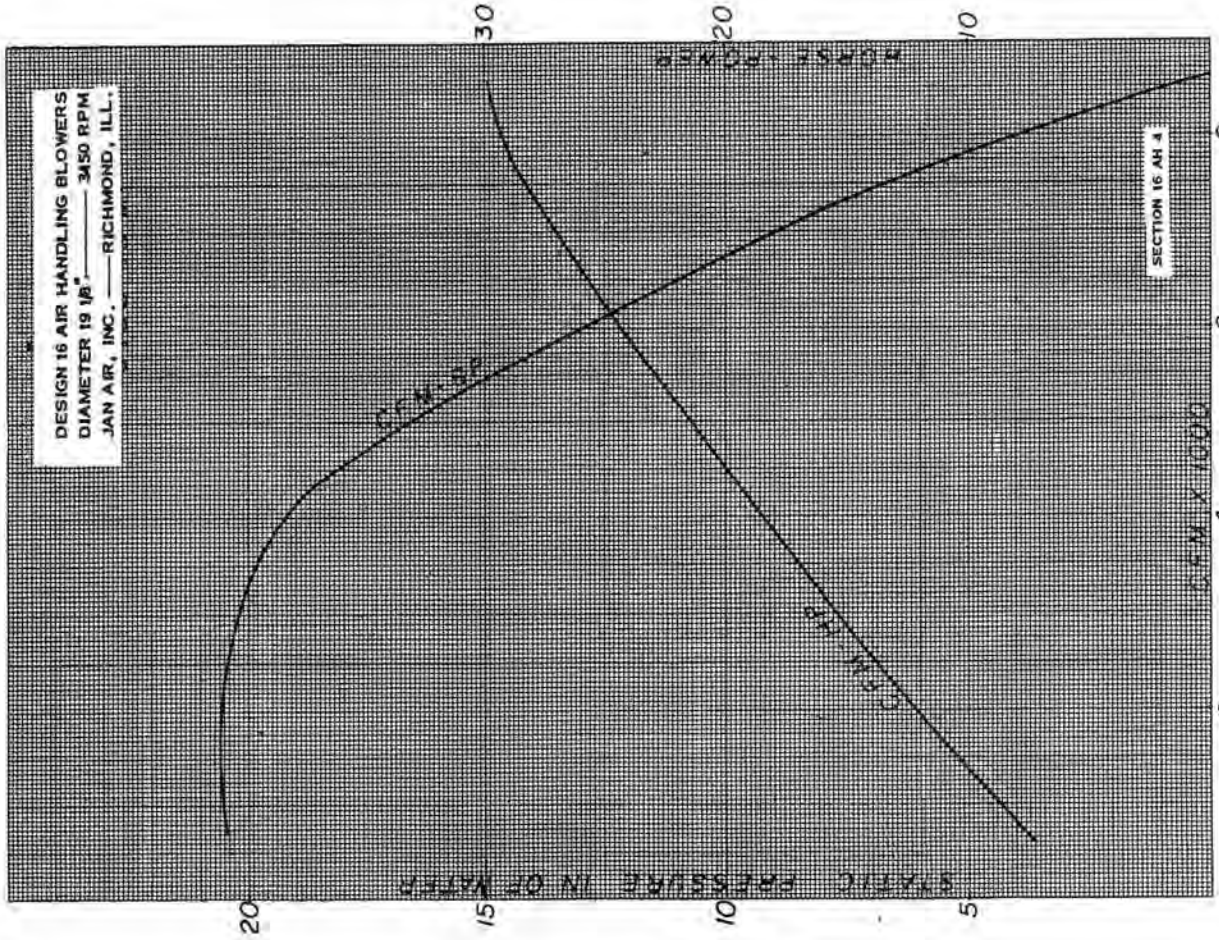

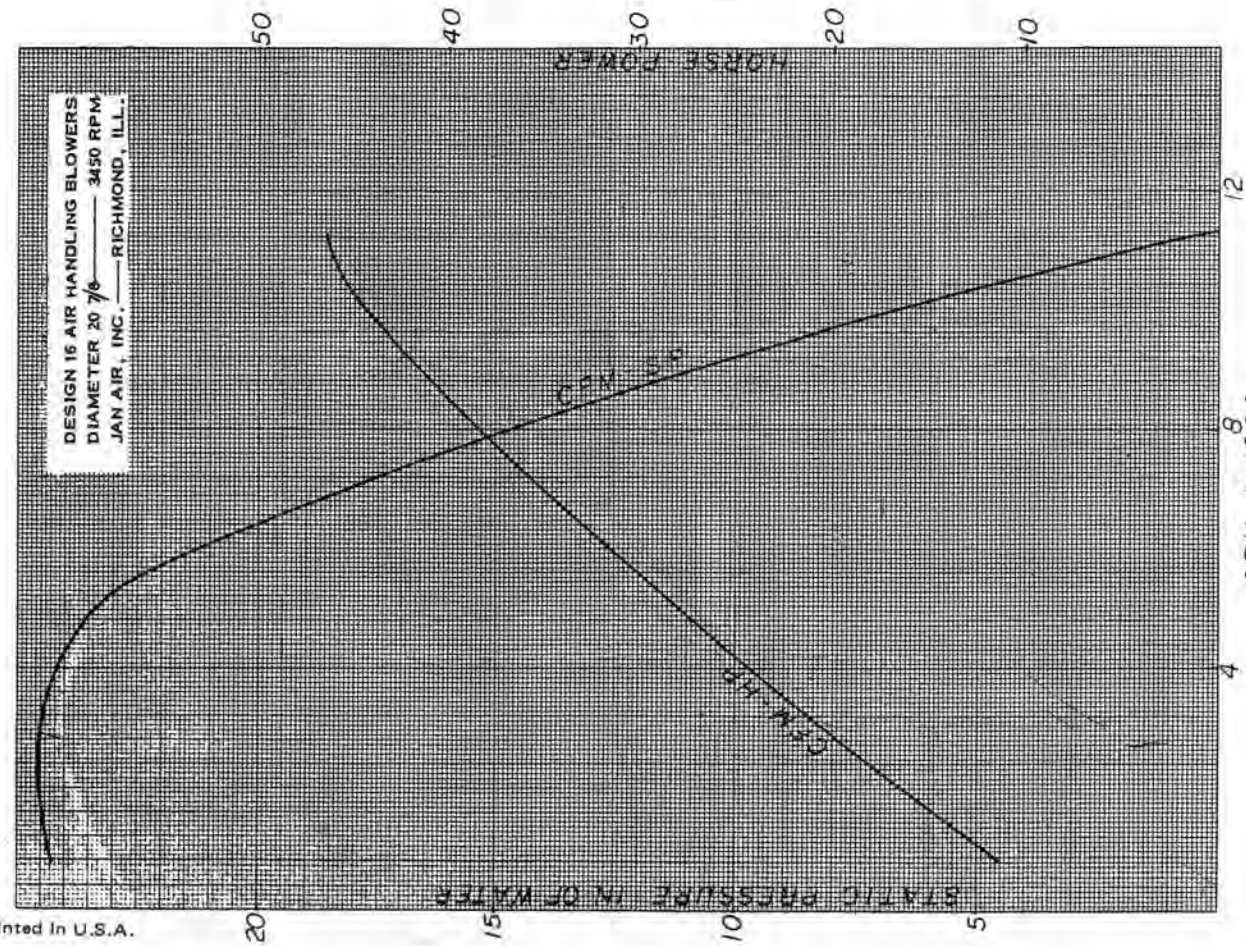

JAN-AIR, Inc.

RICHMOND, ILL. 60071

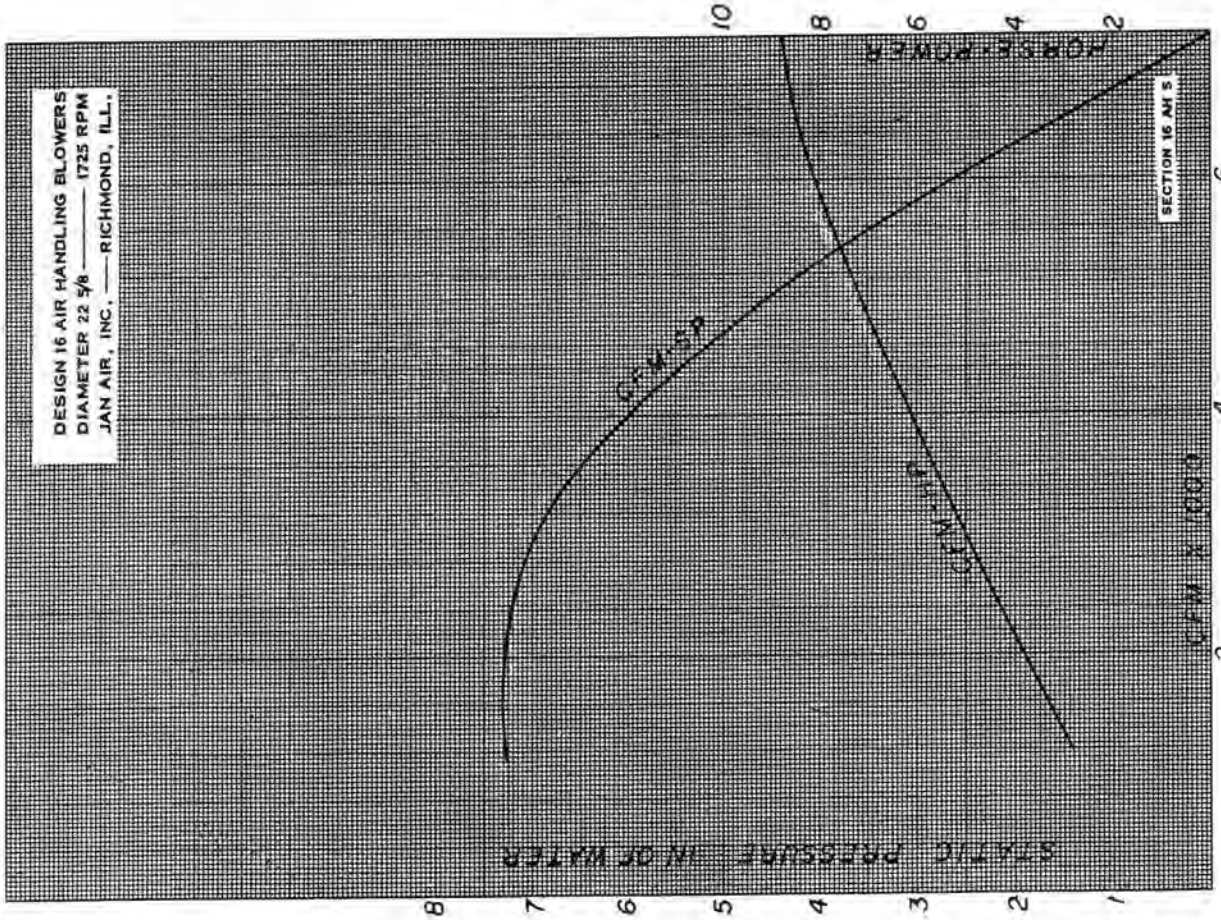

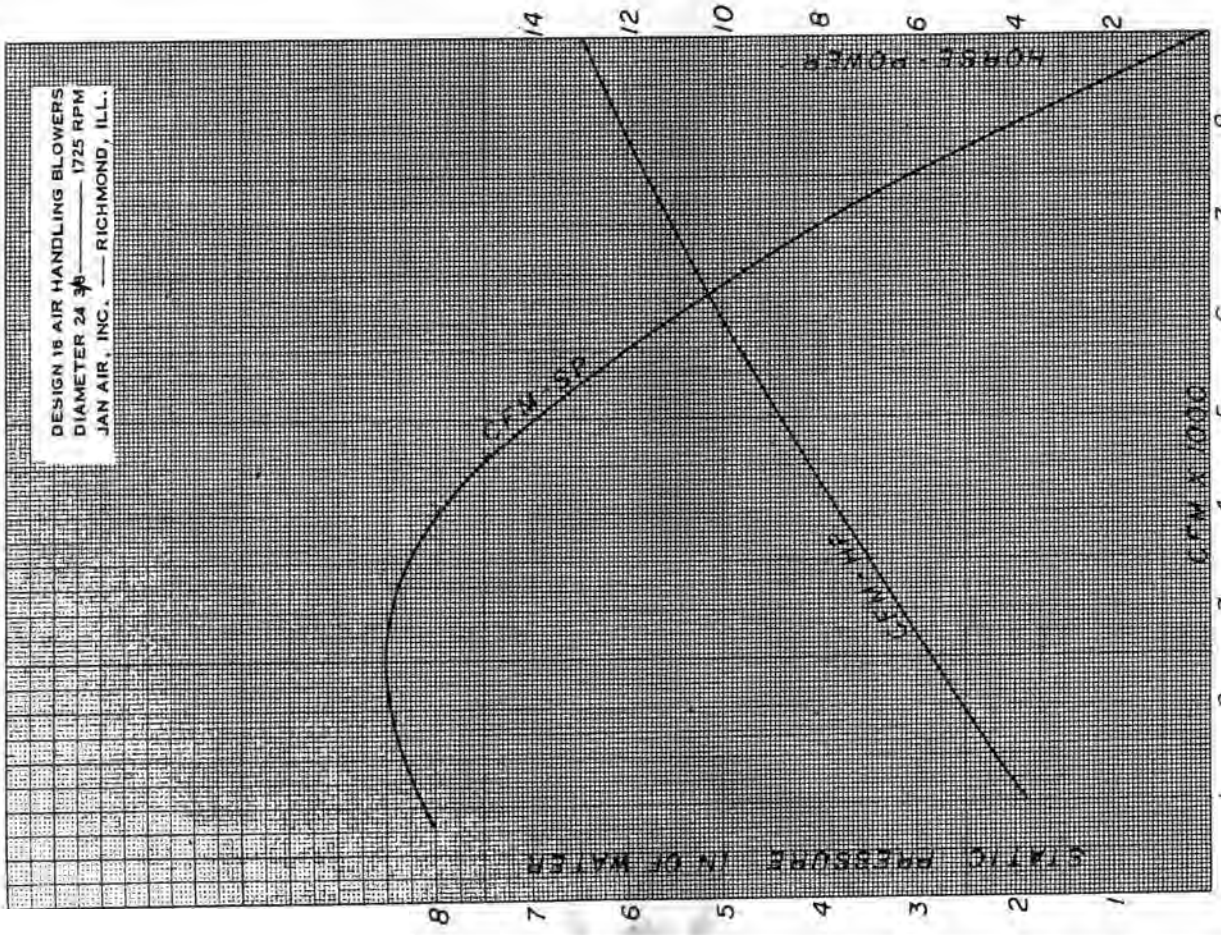

JAN-AIR, Inc.

RICHMOND, ILL. 60071

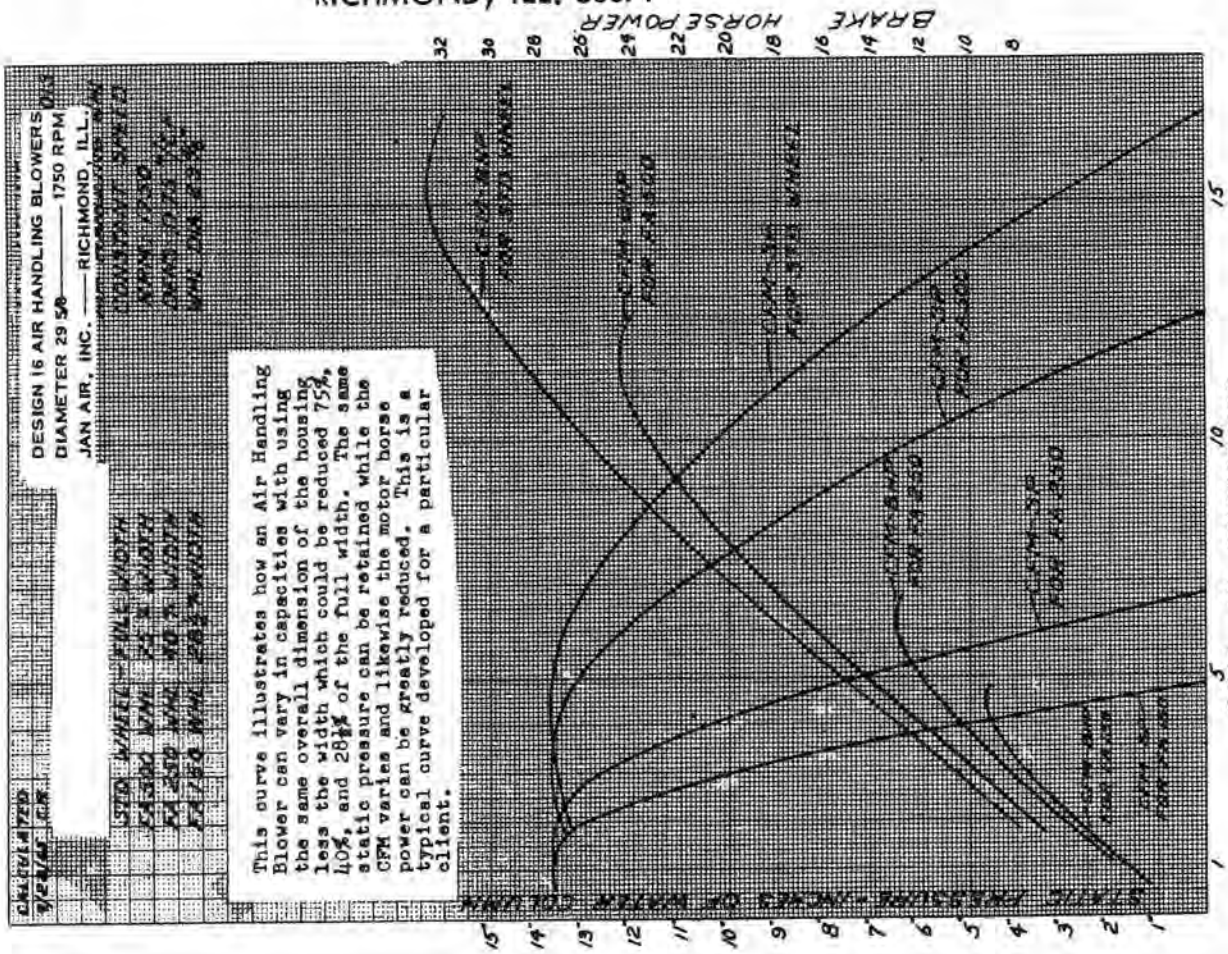

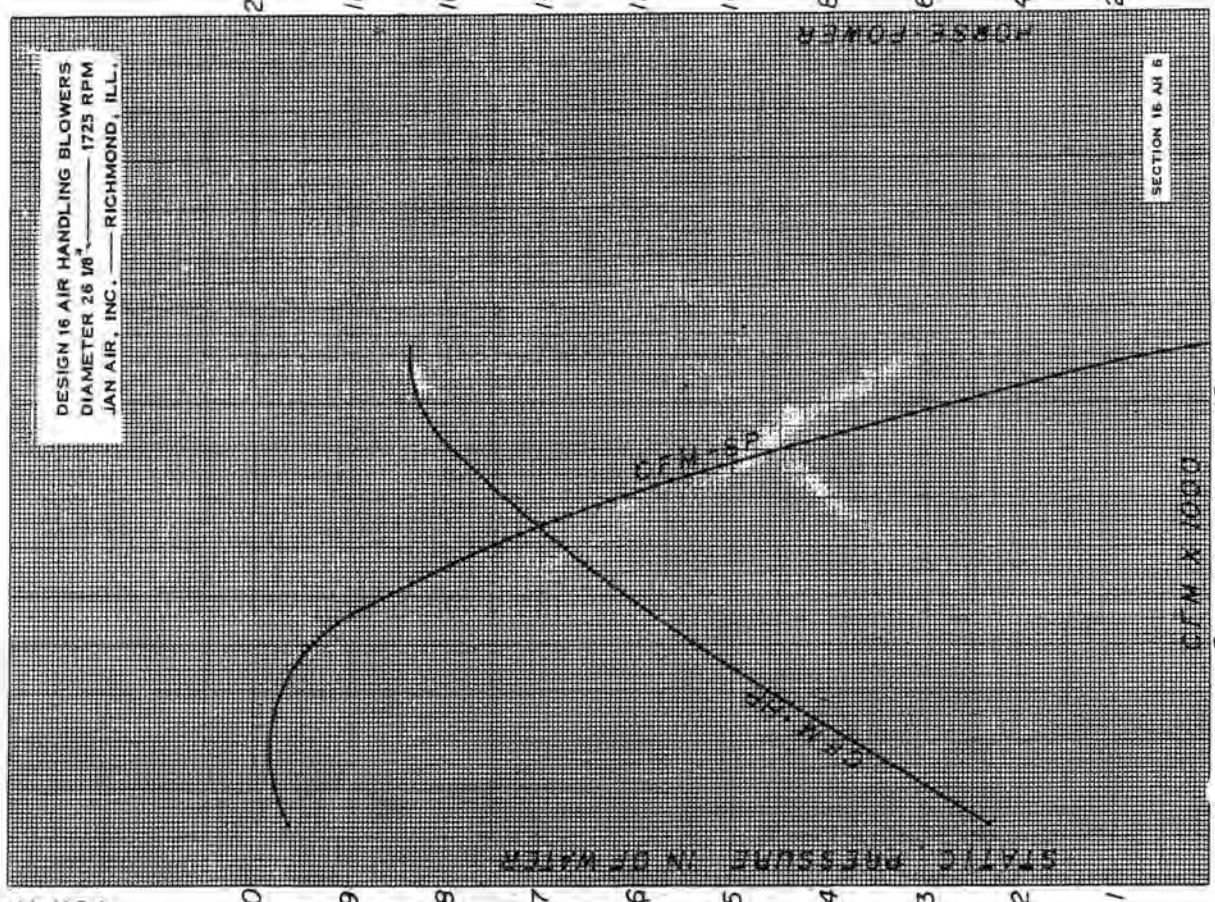

JAN-AIR, Inc.

RICHMOND, ILL. 60071

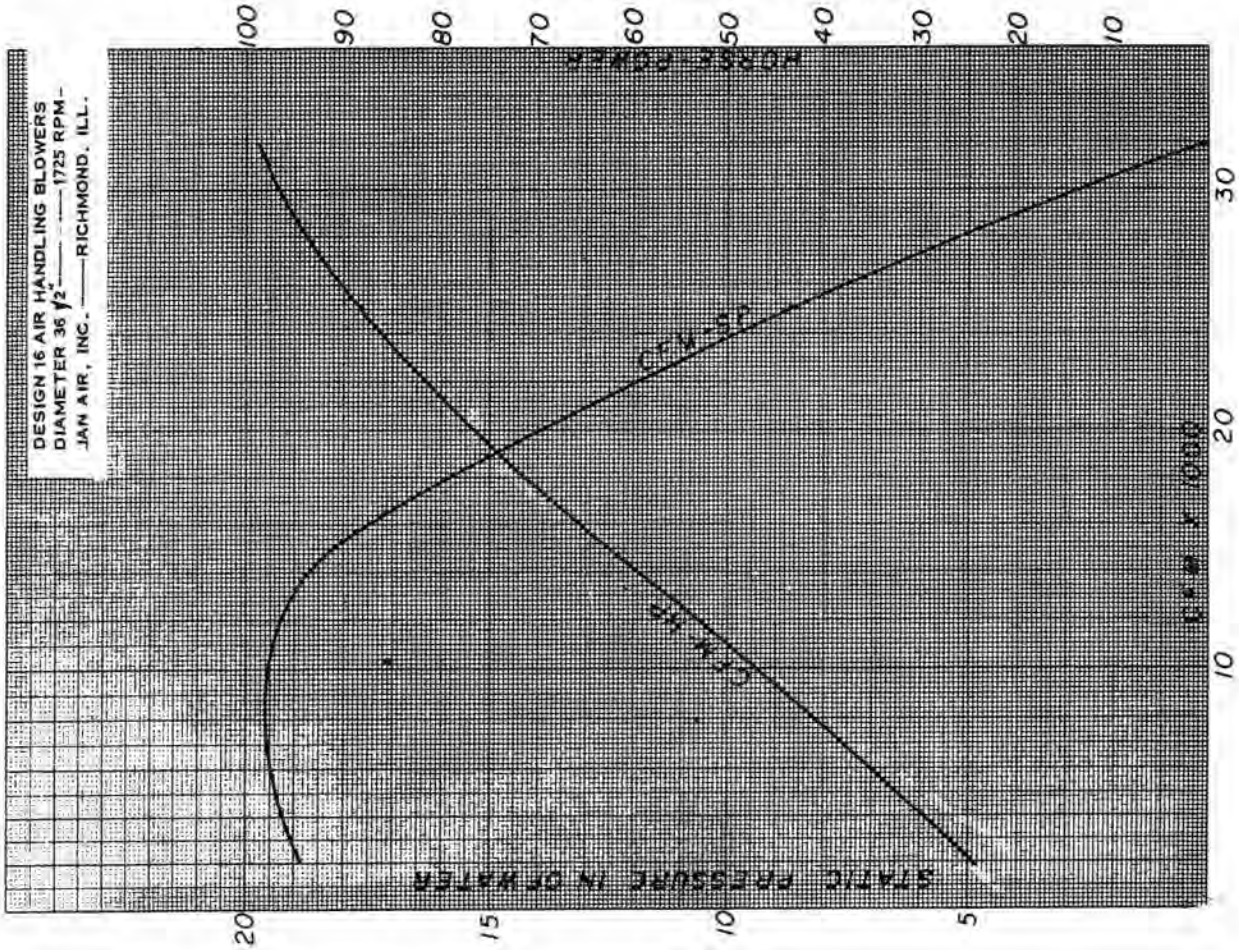

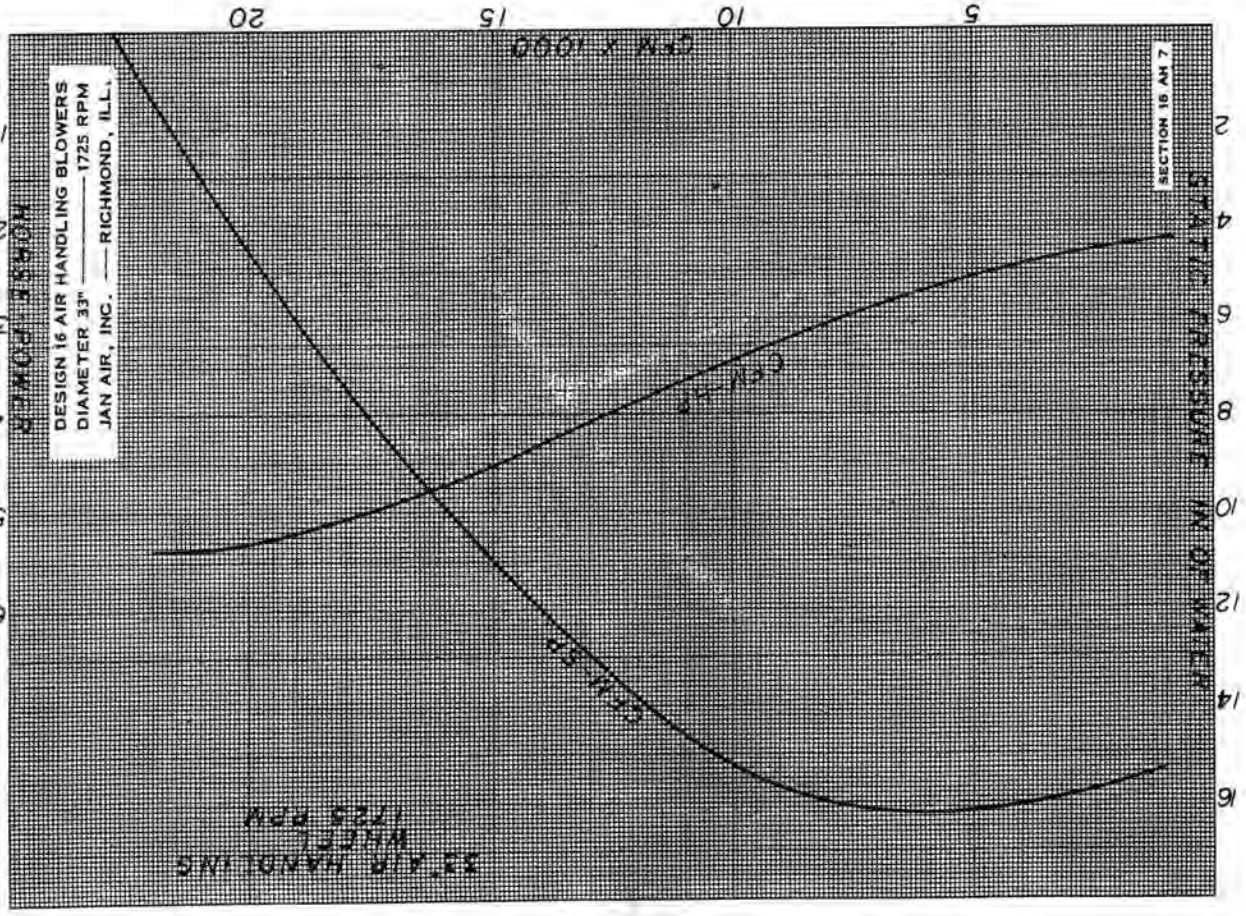

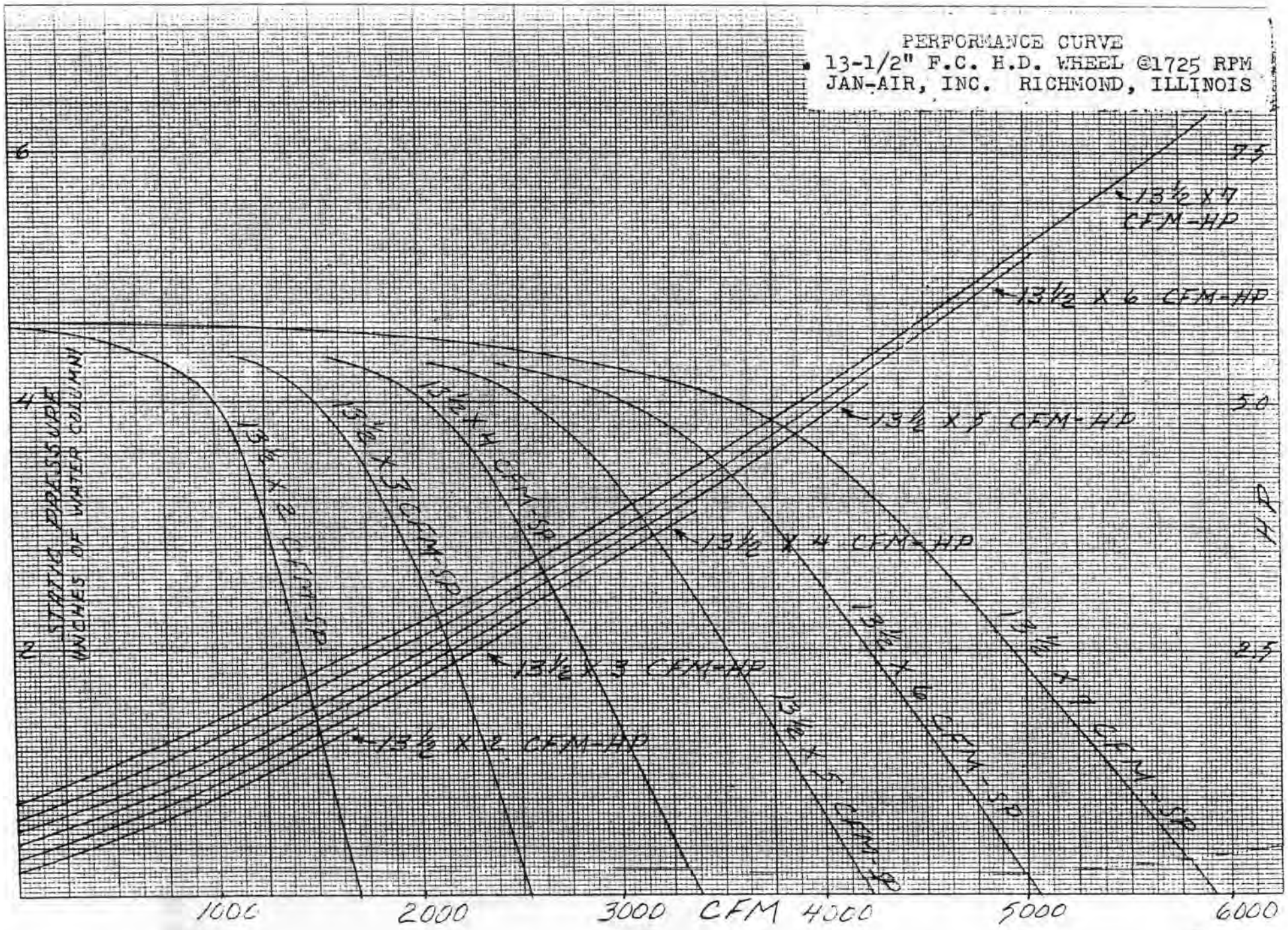
PERFORMANCE CURVE
13-1/2" F.C. H.D. WHEEL @1725 RPM
JAN-AIR, INC. RICHMOND, ILLINOIS
STATIC PRESSURE
INCHES OF WATER COLUMN
H.P.
CFM
1000
2000
3000
4000
5000
6000
6
4
2
7.5
5.0
2.5
13½ X 7 CFM-HP
13½ X 6 CFM-HP
13½ X 5 CFM-HP
13½ X 4 CFM-HP
13½ X 3 CFM-HP
13½ X 2 CFM-HP
13½ X 7 CFM-SP
13½ X 6 CFM-SP
13½ X 5 CFM-SP
13½ X 4 CFM-SP
13½ X 3 CFM-SP
13½ X 2 CFM-SP

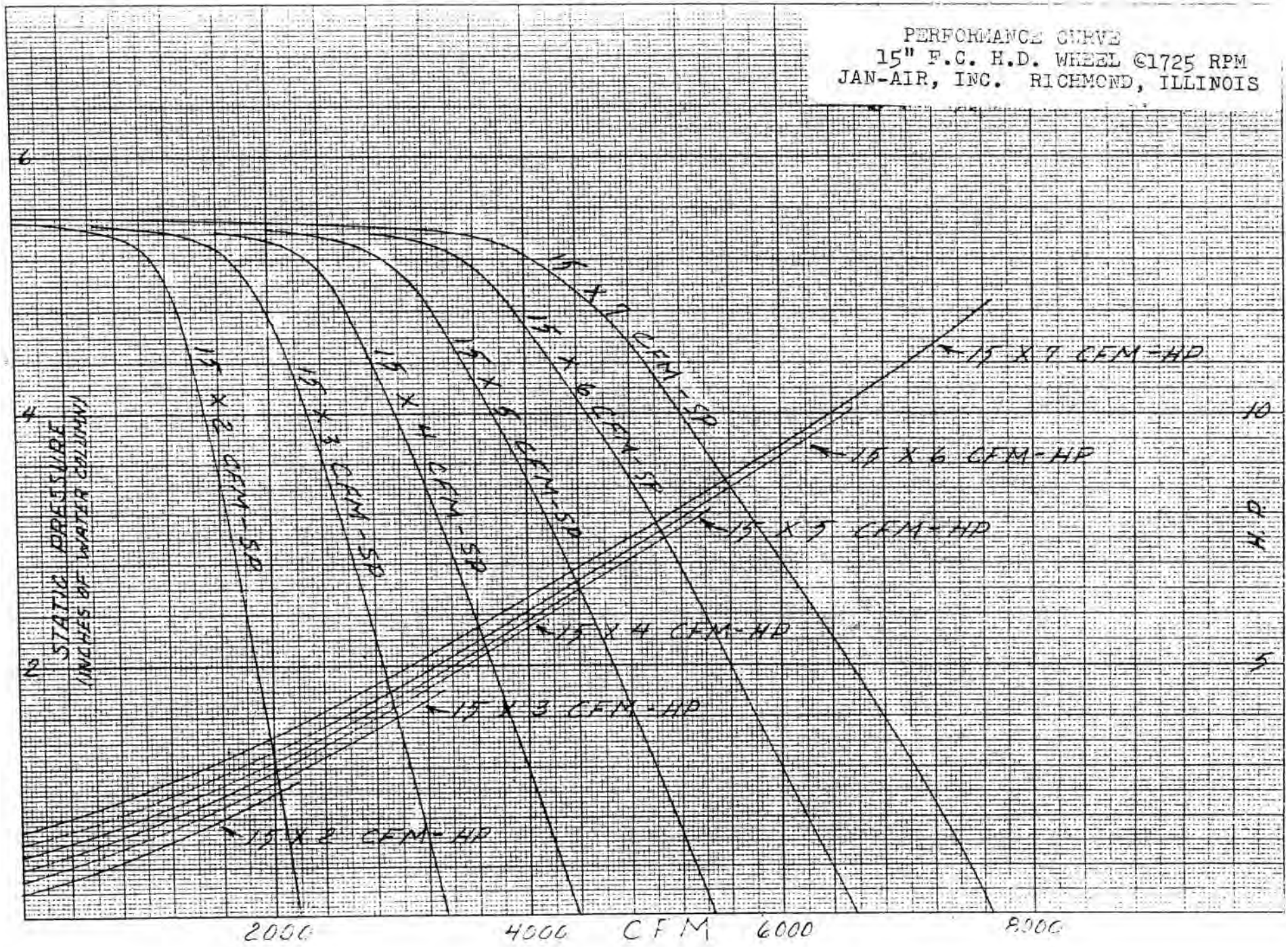
PERFORMANCE CURVE
15" F.C. H.D. WHEEL ©1725 RPM
JAN-AIR, INC. RICHMOND, ILLINOIS
STATIC PRESSURE
INCHES OF WATER COLUMN
2
4
6
2000
4000
CFM
6000
8000
H.P.
5
10
15 X 2 CFM-HP
15 X 3 CFM-HP
15 X 4 CFM-HP
15 X 5 CFM-HP
15 X 6 CFM-HP
15 X 7 CFM-HP
85-MPG
15 X 2
15 X 3
15 X 4
15 X 5
15 X 6
15 X 7

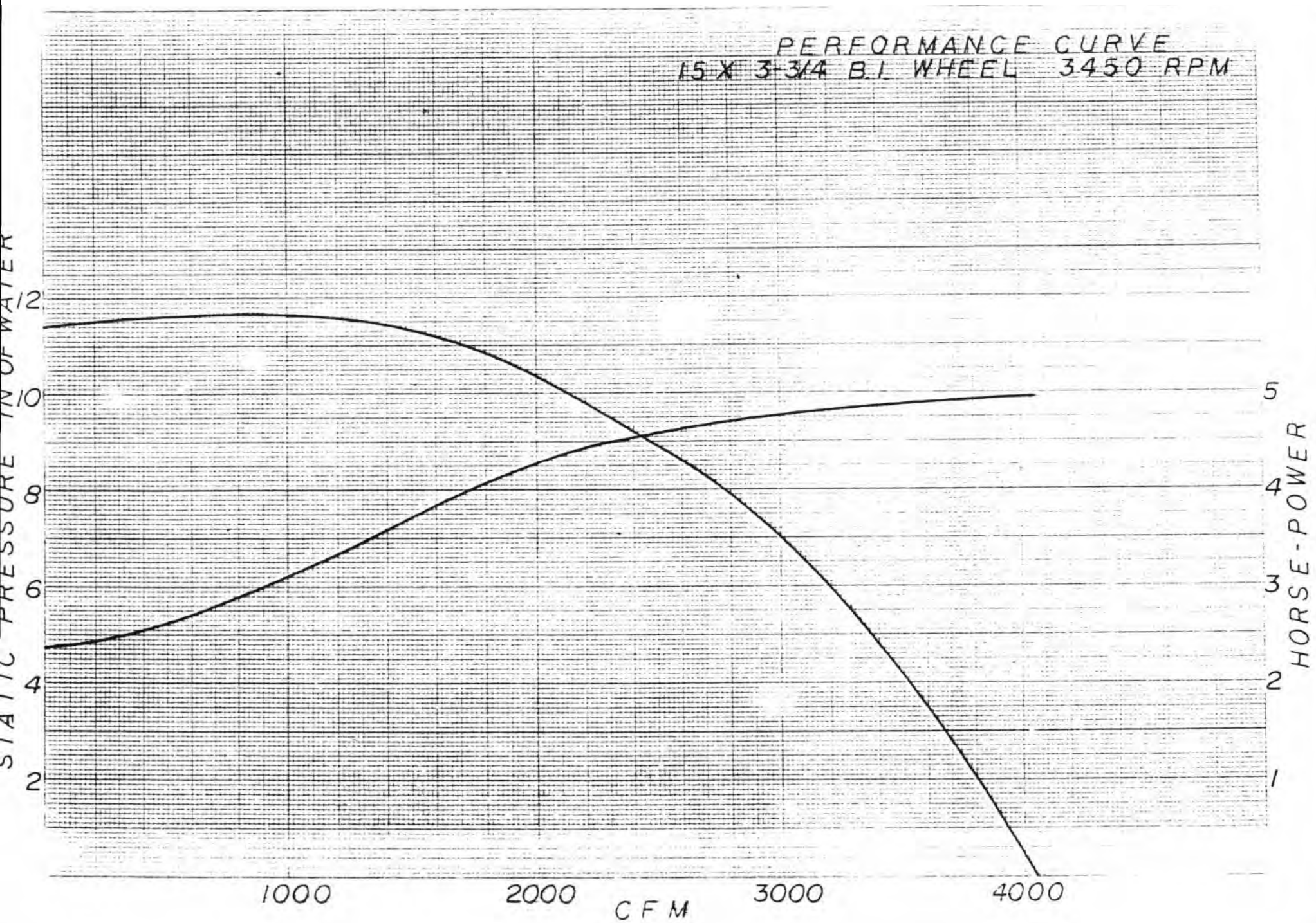
PERFORMANCE CURVE
15 X 3-3/4 B.I. WHEEL 3450 RPM
STATIC PRESSURE IN OF WATER
12
10
8
6
4
2
HORSE-POWER
5
4
3
2
1
1000
2000
3000
4000
CFM

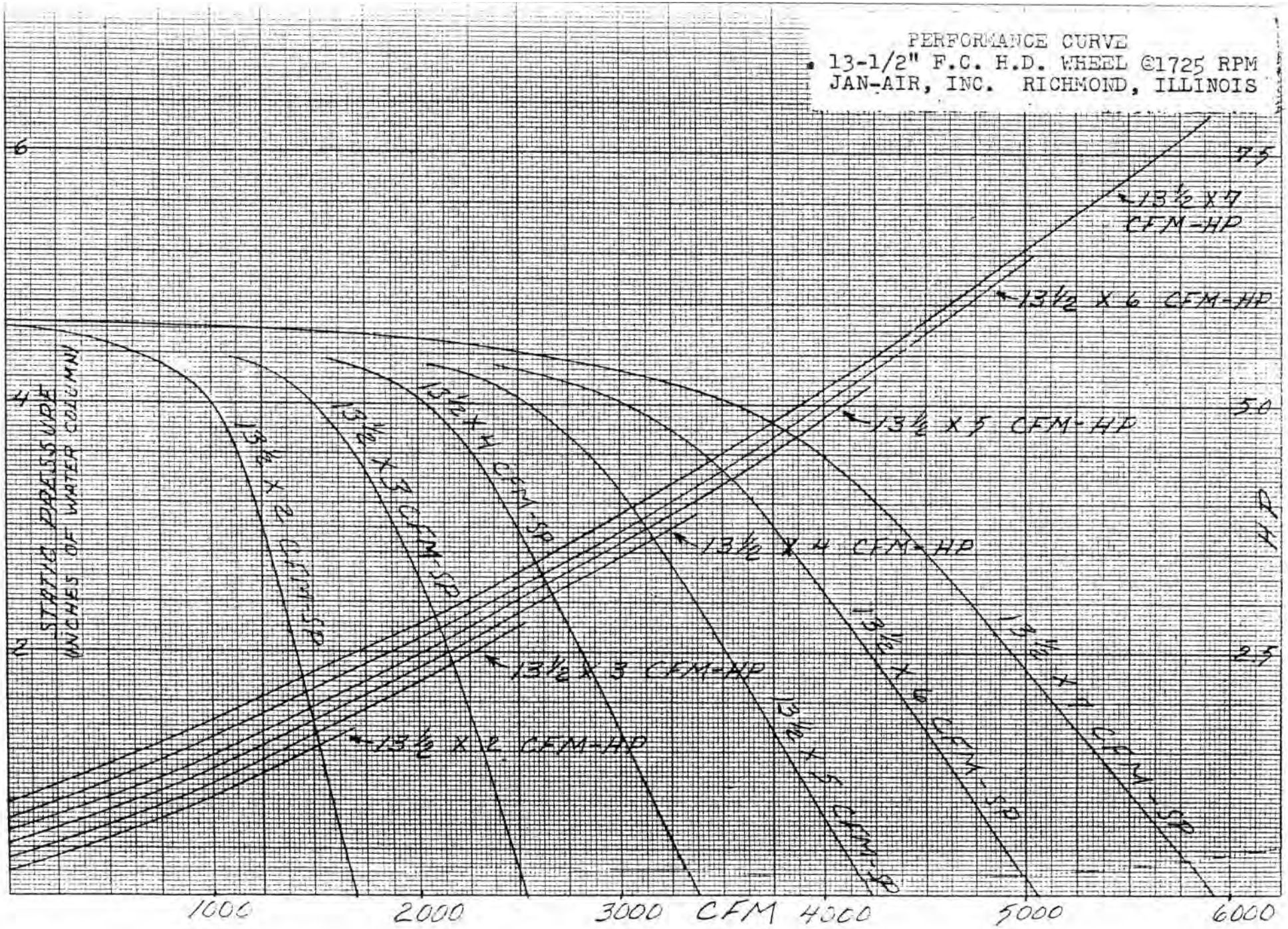

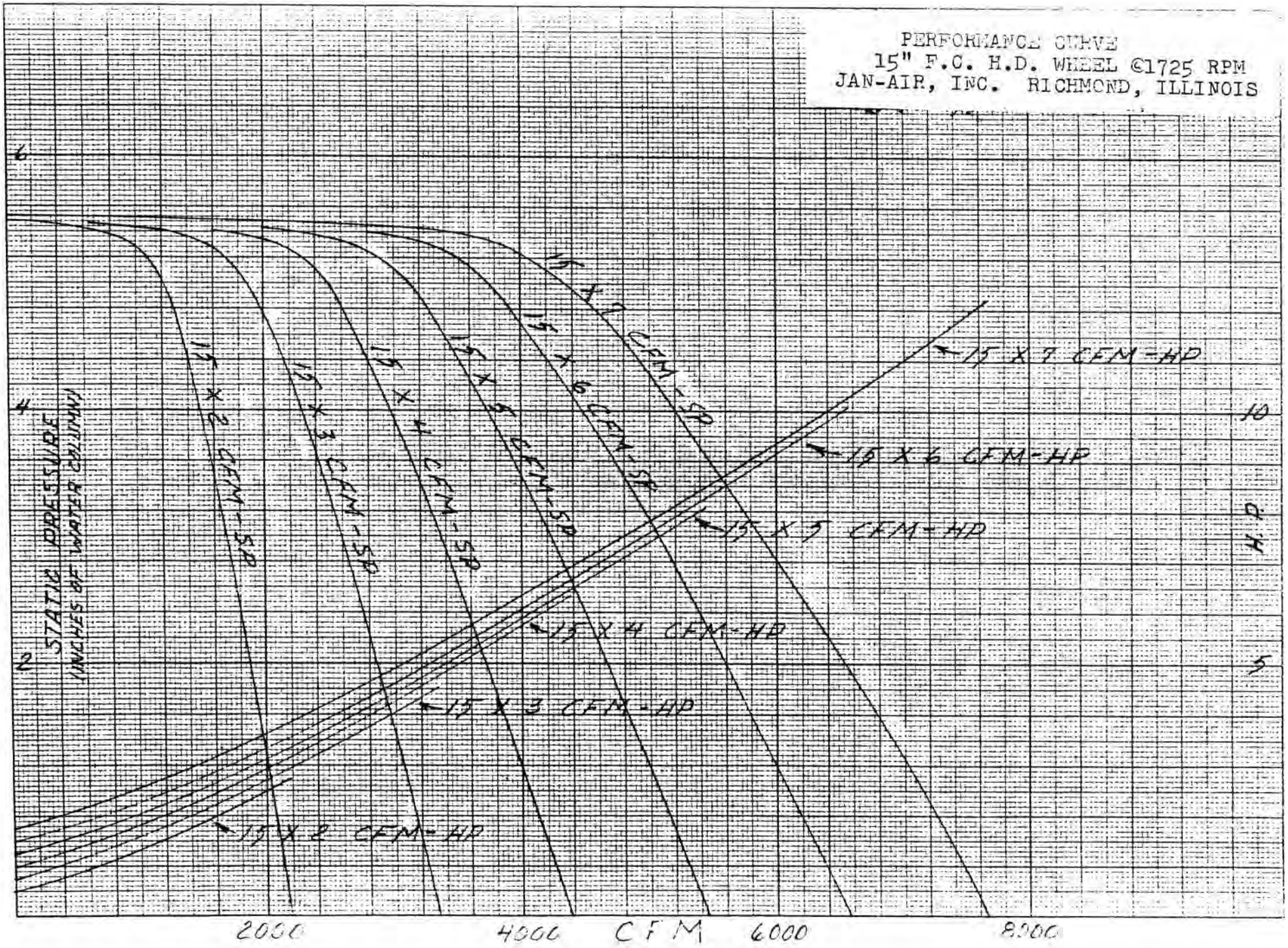
PERFORMANCE CURVE
15" F.C. H.D. WHEEL ©1725 RPM
JAN-AIR, INC. RICHMOND, ILLINOIS
STATIC PRESSURE
(INCHES OF WATER COLUMN)
6
4
2
.85-WG 2 X 11
.85-WG 3 X 11
.85-WG 4 X 11
.85-WG 5 X 11
.85-WG 6 X 11
.85-WG 7 X 11
15 X 2 CFM-HP
15 X 3 CFM-HP
15 X 4 CFM-HP
15 X 5 CFM-HP
15 X 6 CFM-HP
15 X 7 CFM-HP
10
H.P.
5
2000
4000
CFM
6000
8000

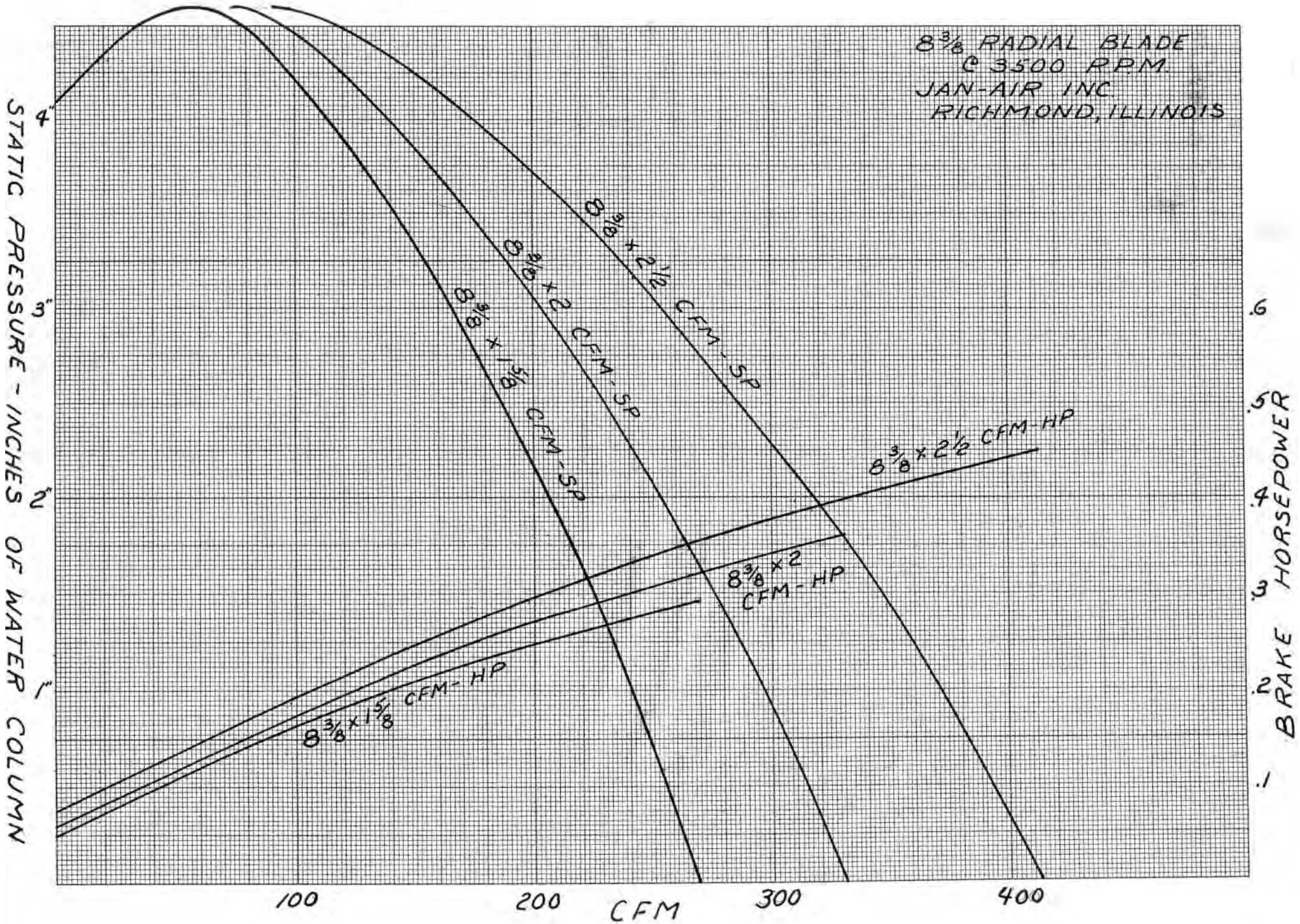
8 3/8 RADIAL BLADE
@ 3500 R.P.M.
JAN-AIR INC.
RICHMOND, ILLINOIS
8 3/8 x 2 1/2 CFM-SP
8 3/8 x 2 CFM-SP
8 3/8 x 1 5/8 CFM-SP
8 3/8 x 2 1/2 CFM-HP
8 3/8 x 2 CFM-HP
8 3/8 x 1 5/8 CFM-HP
STATIC PRESSURE - INCHES OF WATER COLUMN
BRAKE HORSEPOWER
CFM
100
200
300
400
1"
2"
3"
4"
.1
.2
.3
.4
.5
.6

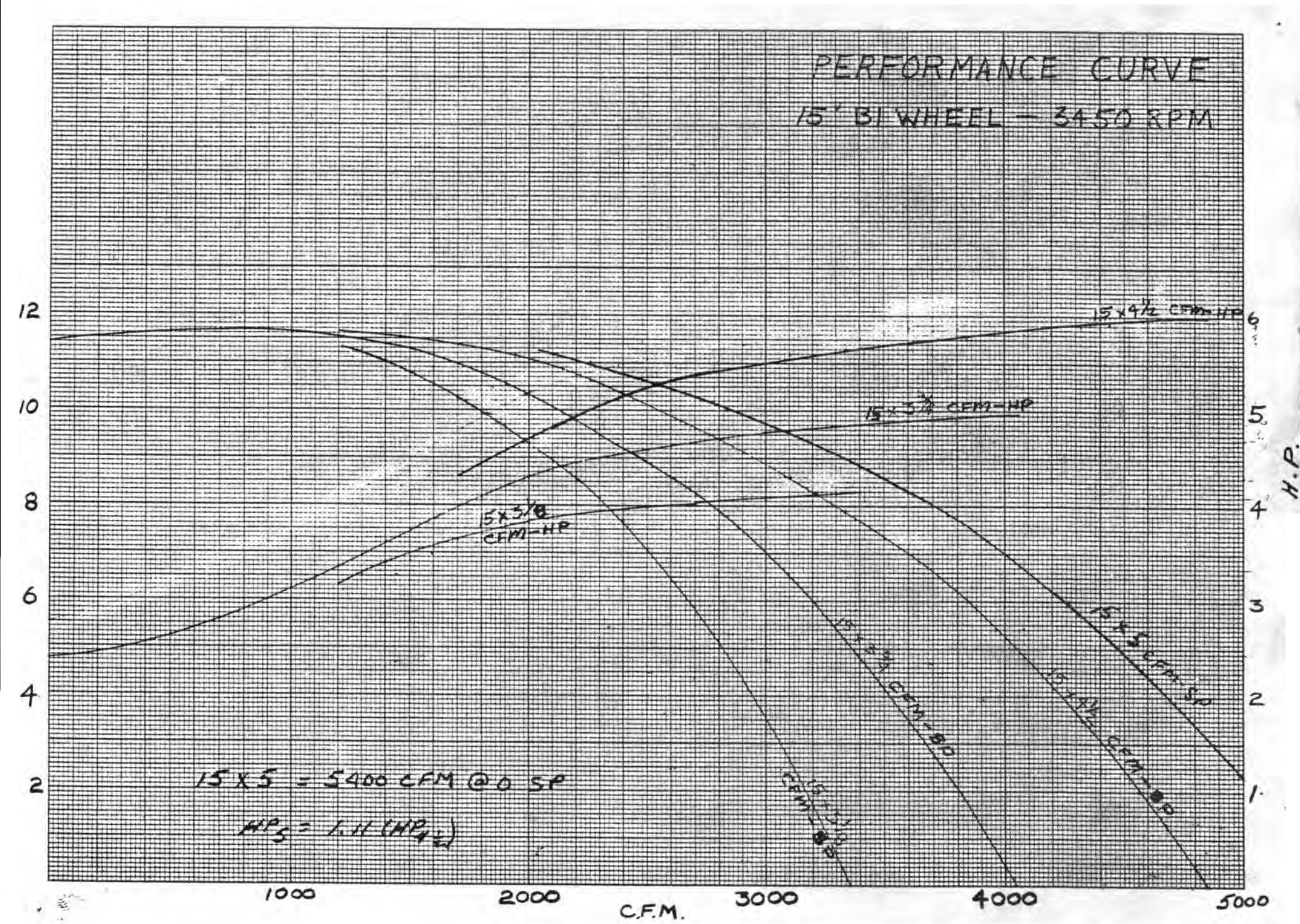
PERFORMANCE CURVE
15" BI WHEEL — 3450 RPM
15 x 4½ CFM-HP
15 x 3¾ CFM-HP
15 x 3/8 CFM-HP
15 x 5 CFM-SP
15 x 4½ CFM-SP
15 x 3¾ CFM-SP
15 x 3/8 CFM-SP
15 X 5 = 5400 CFM @ 0 SP
HP5 = 1.11 (HP4½)
12
10
8
6
4
2
6
5
4
3
2
1
H.P.
1000
2000
3000
4000
5000
C.F.M.

JAN-AIR, Inc.

RICHMOND, ILL. 60071

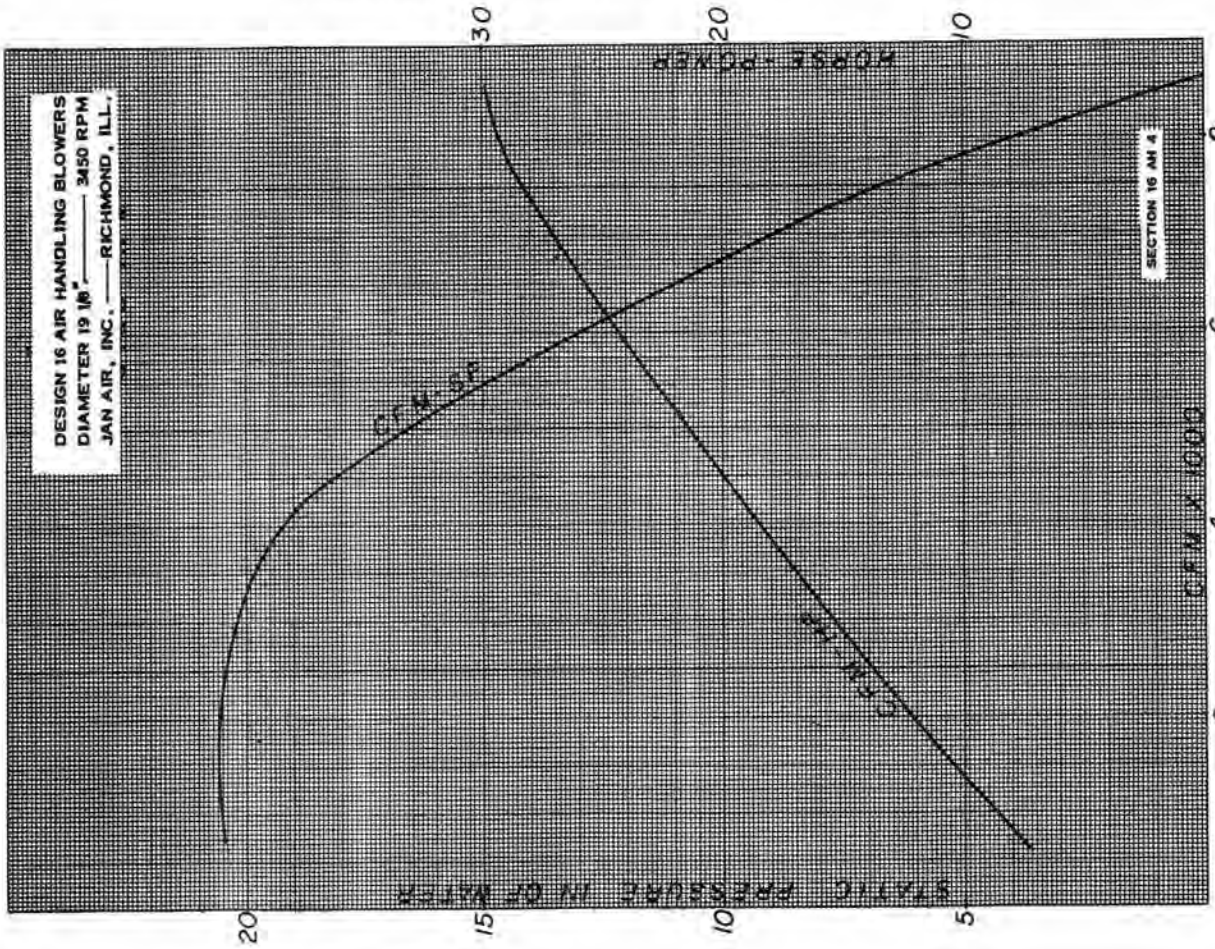

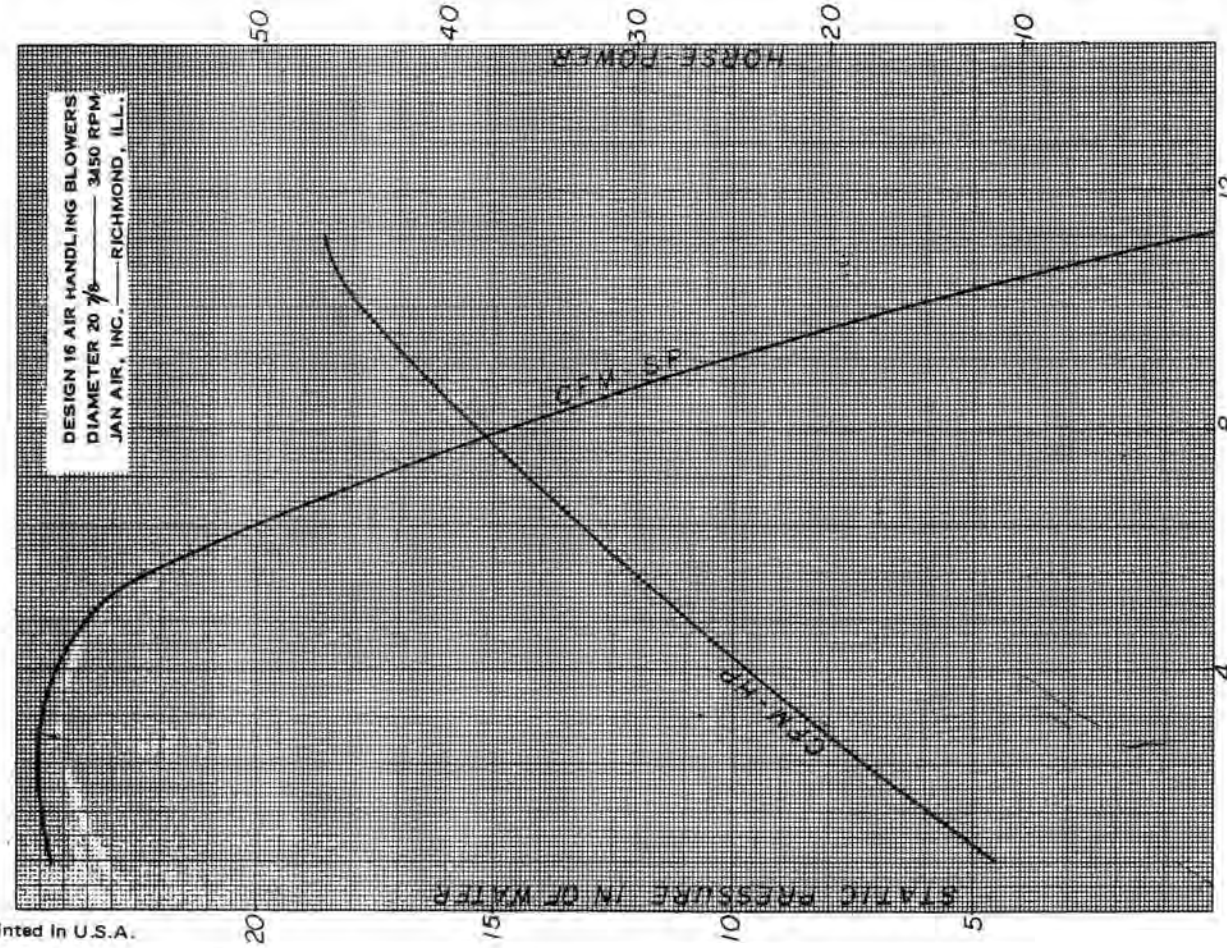

JAN-AIR, Inc.

RICHMOND, ILL. 60071